RBC® AEROSPACE BEARINGS

Plain Bearings

The Global Leader in Aerospace Bearings

Plain Bearings

- Spherical Bearings
- Rod End Bearings
- Journal Bearings
- Links and Assemblies

www.rbcbearings.com

INTRODUCTION

Industrial Heritage and Know-How 3

- **Warranty** 5
- **Contact Information** 6

PLAIN BEARINGS: SPHERICAL, ROD-END, AND JOURNAL BEARINGS

- **Engineering Section for Plain Bearings** 7–17

SPHERICAL BEARINGS

Spherical Bearings: Section Header – Index 18

Tables – Spherical Bearings

Self-Lubricating 19–30
- AS81820 Narrow/Wide Series 19
- AS81820 Type A Extended Life Narrow/Wide Series 21
- AS81820 Lined Bore Narrow/Wide Series 23
- Sealed Narrow/Wide Series 25
- EN Standard Series 27

Metal-to-Metal 31–37
- AS81936 Series 31
- AS8976 (MS21154 & MS21155) Narrow Series 35
- EN Standard Series 36
- Wide Series 37

High-Misalignment 38–40
- Self-Lubricating Series 38
- EN Standard Series 39
- Metal-to-Metal Series 40

Light Weight/Self-Lubricating 41–42
- Aluminum Narrow Series 41
- Aluminum Wide Series 42

High Temperature/Self-Lubricating 43–44
- High Temperature Narrow Series 43
- High Temperature Wide Series 44

Loader Slot Feature Page 45
- Corrosion Resistant Single V-Groove 46
- Corrosion Resistant Double V-Groove 47

Split Ball Feature Page 48

Continued on next page

PLAIN BEARINGS TABLE OF CONTENTS

ROD END BEARINGS

Rod End Bearings: Section Header – Index 49

Tables – Rod End Bearings

Self-Lubricating 50–62
- AS81935/ (1,2,4,5) Alloy Steel, External/Internal Threaded Series 50
- AS81935/ (6,7,8,9) CRES PH13-8Mo, External/Internal Threaded Series . . . 54
- External/Internal Threaded/ 17-4PH; CRES 440C Series 58
- EN Standard Series 62

CRES, Metal-to-Metal 63–64
- CRES, Metal-to-Metal, External Threaded Series 63
- CRES, Metal-to-Metal, Internal Threaded Series 64

High-Misalignment 65–68
- Self-Lubricating External/Internal Threaded Wide Series 65
- Metal-to-Metal External/Internal Threaded Wide Series 67

High Temperature/Self-Lubricating 69–70
- External/Internal Threaded Series 69

Loader Slot Rod End Feature Page 71
- External Threaded Load Slot Series 72

JOURNAL BEARINGS

Journal Bearings: Section Header – Index 73

Tables – Journal Bearings

Self-Lubricating 74–83
- AS81934 Plain Series 74
- AS81934 Flanged Series 76
- EN Standard Series 78
- High Temperature Plain/Flanged Series 82

Uniflon® HP Machinable Liner 84–87
- AS81934 Plain Series 84
- AS81934 Flanged Series 86

Dyflon® Water Resistant Plain/Flanged Series 88–89

Standard Bushing Feature Page 90

Unlined Bushings 91–94
- NAS Plain/Flanged Series 91
- MS CRES Plain/Flanged Series 93

Special Bushing Feature Page 95

Links and Assemblies Feature Page 96

SAMPLE APPLICATIONS

- **Helicopter Applications** 98
- **Airframe Applications** 100

CONVERSION TABLES 102–103

RBC Aerospace Bearings – Rolling Element Bearings Catalog

RBC Aerospace Bearings also offers a catalog dedicated to our precision Rolling Element Bearings, including aircraft control bearings, ball bearing rod ends, needle track roller bearings, and thin section ball bearings. This catalog features detailed information regarding general product features and technical specifications, part drawings, complete engineering sections for each product category, and ordering information.

Also available online.

Please visit us online at rbcbearings.com

RBC Aerospace Bearings Locations

RBC AeroStructures
123 Commerce Way
Westminster, SC 29693
Phone: 864.886.4601

Aircraft Products, Inc.
2788 Winsted Road
Torrington, CT 06790
Phone: 860.626.7800

Allpower Manufacturing Company
13141 Molette Street
Santa Fe Springs, CA 90670
Phone: 562.802.2640

Heim Bearings Company
60 Round Hill Road
Fairfield, CT 06824
Phone: 203.255.1512

Kahr Bearing
5675 West Burlingame Road
Tucson, AZ 85743
Phone: 520.744.1000

Industrial Tectonics Bearings Corporation
18301 South Santa Fe Avenue
Rancho Dominguez, CA 90221
Phone: 310.537.3750

RBC West Trenton
400 Sullivan Way
West Trenton, NJ 08628
Phone: 609.882.5050

Schaublin SA
Rue de la Blancherie 9
CH-2800
Delémont, Switzerland
Phone: 011.41.32.421.13.00

Southwest Products/US Bearing
5001 B Commerce Drive
Baldwin Park, CA 91010
Phone: 626.358.0181

Transport Dynamics
3131 West Segerstrom Avenue
Santa Ana, CA 92704
Phone: 714.546.3131

©2008, 2011, 2016 RBC Bearings Incorporated. All rights reserved.

RBC Bearings Corporate Headquarters
Oxford, Connecticut U.S.A.

INDUSTRIAL HERITAGE AND KNOW-HOW

RBC Bearings has a long and impressive history as an innovator in bearing technology – one that has been highlighted by patents for creative engineering design. Today, the company comprises a number of facilities throughout North America and Europe, with a global network of sales engineers, aerospace distributors, and authorized agents. Publicly held (Nasdaq: ROLL), RBC has grown steadily through strategic planning and acquisitions. Since the early nineties, these acquisitions have continued to expand the breadth of an extensive product line of bearings and related products that serve global industries – chief among them, aerospace.

Since its earliest days in West Trenton, New Jersey, the company has been at the forefront of bearing technology. **Roller Bearing Company of America,** founded in 1919, manufactured a variety of bearing products. In 1941, Roller Bearing Company became the sole source supplier for the landing gear bearings on military aircraft manufactured by Ford Motor Company. The RBC facility in West Trenton continues today to be a major supplier of helicopter main and tail rotor flight control bearings to, among others, the U.S. Government.

In 1990, RBC acquired **Industrial Tectonics Bearings (ITB).** Located in Rancho Dominguez, California, the division was founded in 1955. ITB manufactures custom bearings along with a complete line of thin section ball bearings with capabilities up to 40 inches outside diameter. Typical aerospace applications include engine, gearbox and transmission bearings, helicopter swashplate bearings and electro-optical targeting pods. ITB specializes in the manufacturing of complex, high precision bearings, utilizing special materials and coatings, while serving the aerospace and defense markets.

Transport Dynamics, founded in 1955, and was acquired in 1992. Also located in southern California, Transport Dynamics is one of RBC's main producers of plain bearings, manufacturing journal bearings (bushings), spherical plain, and rod end product with a focus on engine and helicopter applications. Plain bearings at Transport Dynamics are constructed in metal-to-metal and as lined, self-lubricating product. Transport Dynamics offers over 30 different liner systems depending upon the loading, wear, and temperature conditions in the application (including the patented Fibriloid®, Fabroid®, and Fiberglide® liner technology). Transport Dynamics manufactures plain bearing product in both conventional swaged configurations and as load slot entry bearings (Messerschmidt design). Transport Dynamics was actually the inventor of the lined spherical bearing, with the first application developed in 1957 for the Chevrolet Corvette suspension joint. Boeing adopted this new bearing design and soon it was used throughout the 727 model aircraft. Transport Dynamics actually licensed this technology to all their competitors back in the 1960s.

Heim® Bearings, Fairfield, Connecticut, joined the RBC family in 1993. Founded by Louis Heim in 1942, the Heim® name has been known and respected for designing the first integral rod end bearing, specifically the Unibal® spherical bearing rod end. This bearing was originally designed to solve aircraft delivery delays due to critical shortages in rod ends and self-aligning bearings during the war effort. Heim® Bearings Company is also well known for inventing centerless grinding and for inventing the swaging process used in the manufacture of spherical plain bearings. In addition to rod end and spherical bearings, Heim® Bearings Company manufactures specialized radial ball bearings, such as a cobalt race hybrid bearing with silicon nitride balls for a hot bleed air valve application in

©2008, 2011, 2016 RBC Bearings Incorporated. All rights reserved.

aircraft auxiliary power units, suspension applications on Military land vehicles, elastomeric bearings and machinable liner systems. Heim® Bearings Company is also the world's largest provider of aerospace ball bearing rod ends, including manufacture with the corrosion-resistant AeroCres® material. Ball bearing rod ends can be found throughout aircraft in positioning and linkage assemblies, as well as on swaged tubes throughout the airframe.

In 2000, RBC acquired **Schaublin SA** based in Delémont, Switzerland. As a result, RBC added Schaublin's metric rod ends and metric spherical bearings to the family of global RBC products, and a base with which to service the European market. Within this 140,000 sq. ft. facility, RBC has established the company's European Distribution Center. In addition, Schaublin was licensed by Heim® Bearings to market Unibal® rod ends back in the 1950s. Schaublin specializes in light weight titanium bearing solutions, including next level assemblies utilizing integral split ball designs for the aerospace industry. RBC also acquired what is now called **RBC France** — a sales, engineering, marketing, and distribution arm for Schaublin product, located in Les Ulis, France.

In December, 2003, RBC acquired the business of the former Torrington "Standard" Plant — a long-established leader in airframe products. This facility, referred to as **RBC Aircraft Products, Inc. (API)** was founded in 1866. The Torrington name is synonymous with quality engineering and precision – and complements the RBC portfolio of aerospace product offerings. At the API plant, RBC produces aircraft needle track roller bearings, lined track rollers, cam followers, radial ball bearings, and is RBC's main facility for the production of 52100 cad plated, 440C stainless, and zinc nickel plate airframe control ball bearings. RBC has become the number one producer worldwide of airframe control product and has virtually every series and size Mil Spec approval along with an extensive list of European approvals.

RBC has made an additional aerospace business acquisition in each of the years 2004, 2005, and 2006; acquiring **U.S. Bearing,** Chatsworth, California; **Southwest Products Inc.,** Baldwin Park, California; and **Allpower Manufacturing,** Santa Fe Springs, California, respectively. **Southwest Products/US Bearings** has the capability to offer unique swaged bearing solutions (up to 11" OD), in addition to low friction liners and hard coat machining. The product offering has evolved to include split ball spherical and rod ends, large trunnion bearings, specialty rod ends and solid and welded links. SWP/USB has played a major role in the design and support of plain bearings for commercial and military aircraft, helicopter, power plant, satellite, military land vehicle and submarine applications. **Allpower Manufacturing,** a Boeing and Airbus approved supplier, produces a full line of precision bushings, spacers, sleeves, and specialty machined parts servicing the aerospace industry. Capable of offering specialized materials, All Power is proficient with stainless steel, carbon steel, beryllium copper, Inconel®, titanium, aluminum, aluminum bronze and colbalt raw materials, to name a few.

In December, 2008, RBC acquired **A.I.D. Corporation,** now recognized as **RBC AeroStructures**, located in Westminster, SC. RBC AeroStructures compliments the RBC product offering by producing tight tolerance, precision fabricated tubular and machined parts. With a primary focus on fixed-wing and rotary-wing aircraft, some typical applications include: control rods, push-pull rods, connecting links, torque tubes, rod assemblies, struts and cargo tie-downs. This is a vertically intergrated product line to the already broadest line of aerospace bearings offered by RBC in the industry.

In April, 2015, RBC aquired **Kahr Bearings**, as part of the **Sargent Aerospace and Defense** acquisition. Located in Tucson, AZ, Kahr specializes in the design and manufacture of PTFE lined and metal-to-metal monoball and sliding element bearings for military and commercial aircraft and rotorcraft, industrial and passenger railcars, and military marine applications. Kahr's line of Kahr-Lon® liner systems consists of 10 different liner systems which excel in high vibration and high load environments and are common in many aerospace and industrial applications.

Aerospace Segments Served

Aerospace segments served by RBC include commercial and military alike, fixed and rotary wing. RBC serves the world's major airframers (large transport, regional, and general aviation), engines and accessories, defense (land and marine vehicles, missile and bomb, optical targeting), space (vehicles and engine), major subsystem providers (landing gear, electrical generation, etc.), and smaller subsystem and component applications (primary and secondary flight control actuation, swaged tube bearing, and structural applications, etc.)

RBC's aerospace operations count among their customers a long list of prestigious names, including Airbus, Boeing, Lockheed Martin, SAAB, Northrop Grumman, BAE Systems, Bombardier, Embraer Aircraft, Spirit Aerosystems, NASA, Bell Helicopter, Sikorsky, Boeing Mesa and Rotocrafts, Rolls-Royce, GE Aircraft Engines, Snecma, Pratt & Whitney, Honeywell, ASCO, Goodrich Aerospace, Moog, Smiths Aerospace, Parker Aerospace, Messier-Dowty, Raytheon, Primus University Swage, LeFiell, and Tyee.

©2008, 2011, 2016 RBC Bearings Incorporated. All rights reserved.

The RBC aerospace divisions are well versed in the many bearing materials, from the standard chrome 52100, to the CRES 440C and 15-5/17-4 stainless product, to the processing of exotic materials like ALTEMP® A286*, Stellite®**, titanium, Inconel®***, beryllium copper, Pyrowear®, and AeroCres®.

Combined revenue of the RBC aircraft divisions, is approximately 75% aerospace. The predominant non-aerospace markets include high-end industrial applications requiring the same stringent tolerances and high-quality precision product.

Quality Statement

All of RBC's aerospace bearings divisions have a formal, documented, and aerospace-approved quality program/system in place. The company is approved to many OEM quality systems, including Airbus, Rolls-Royce, Pratt & Whitney, GE Aircraft Engines, Boeing Commercial Aircraft, Boeing Helicopter, Sikorsky, Lockheed Martin, Northrop Grumman, Snecma, Goodrich, BAE Systems, and the U.S. Government, among others. RBC is on a self-release program with many of these companies.

For example, Industrial Tectonic Bearings (ITB), Rancho Dominguez, California, was promoted to Gold Level Preferred Supplier status at Lockheed Martin Missiles and Fire Control, Orlando, Florida. At this point, RBC is the only Gold bearing supplier to the Lockheed organization. In a statement given by a senior manager for Lockheed Martin Missiles and Fire Control, "…the ITB facility is key in helping us create a world-class supply base." To assess ITB's supplier status, Lockheed Martin performed an on-site business system review, the team concluding that RBC demonstrated a dedication to continuous improvement and process improvement. The Gold status allows ITB to perform its own final inspection of hardware, facilitating a "dock-to-stock" receipt at Lockheed Martin's Orlando factory.

All aerospace divisions of RBC are ISO 9001:2000 and AS9100 certified. Additionally, they are NADCAP accredited in-house for non-destructive testing, heat treat, and weld, or are using NADCAP accredited sourcing. The company is constantly audited by the many major aerospace customers in the world, as well as by the FAA. RBC is aware that material, specification, and/or processing changes are all critical. As such, the company has a traceability process for its manufacturing locations including a procedure for preserving the identity and origin of the bearing and all its components. RBC has the capability to isolate and recall suspect bearings from use and trace the cause of failure to a specific manufacturing lot, material process, or component.

Strategic Plan and Vision

RBC Bearings' strategic plan and vision is to continue down the path of profitability and growth — organic growth including market penetration and the addition of new products and growth via acquisition to which RBC's uncompromising track record of aerospace acquisition attests. RBC has become the world's broadest supplier of aerospace bearing product, serving the industry with spherical, rod end, and journal plain bearings, ball bearings, cylindrical roller bearings, needle track roller bearings, cam follower bearings, tapered roller bearings, airframe control, thin section ball bearings, and ball bearing rod ends. RBC is focused on the aerospace industry and intends to continually complement its broad offering with new products, new technologies, and acquisitions.

RBC has a long tradition of engineering design excellence and innovation in creating solutions to problems, as our patents reflect. The company also strives to stay on the forefront of bearing material, plating, and design technology. Investing in qualified personnel, capital equipment, material and bearing testing is paramount. RBC also strives to continually refine its manufacturing processes, both to maintain the reputation for quality product and long life, and to remain the industry's cost leader.

A very important part of our strategic vision is to develop/expand on a current business partnership with targeted customers. RBC's goals, objectives, and investments support the aerospace market, while many companies are choosing to exit the industry. RBC believes that its objectives are soundly aligned with the needs of the aerospace industry, both short and long term. All of us at RBC look forward to supplying more of our aircraft offerings through all the RBC aerospace divisions participating in your business.

Warranty

RBC's sole warranty is against defects in materials or workmanship. The foregoing warranty is exclusive, and in lieu of all other warranties (whether written, oral or implied) including, but not limited to, the warranty of merchantability, and the warranty of fitness for a particular purpose. A no charge replacement will be made on any product manufactured by RBC, which upon examination by RBC, appears to be defective, provided it is returned to RBC, transportation prepaid, within ninety (90) days of date of sale, and further provided it has been properly selected, installed or mounted and lubricated and not subject to abuse.

Pyrowear® is a registered trademark of Carpenter Technology Corporation.
*ALTEMP® A286 is a registered trademark of ATI Allegheny Ludlum.
**Stellite® is a registered trademark of the Deloro Stellite Company, Inc.
***Inconel® is a registered trademark of Alloys International, Inc. and The international Nickel Company, Inc.

©2008, 2011, 2016 RBC Bearings Incorporated. All rights reserved.

CONTACT US

Domestic

Corporate Headquarters
One Tribology Center
102 Willenbrock Road
Oxford, CT 06478
Phone: 203.267.7001
Fax: 203.267.5012

RBC AeroStructures
123 Commerce Way
Westminster, SC 29693
Phone: 864.886.4601
Fax: 864.886.4615

Aircraft Products, Inc
2788 Winsted Road
Torrington, CT 06790
Phone: 860.626.7800
Fax: 860.626.7886

Allpower Manufacturing Company
13141 Molette Street
Santa Fe Springs, CA 90670
Phone: 562.802.2640
Fax: 562.921.9933

Heim Bearings Company
60 Round Hill Road
Fairfield, CT 06824
Phone: 203.255.1512
Fax: 203.319.7709

Kahr Bearing
5675 West Burlingame Road
Tucson, AZ 85743
Phone: 520.744.1000
Fax: 520.744.9494

Industrial Tectonics Bearings Corporation
18301 South Santa Fe Avenue
Rancho Dominguez, CA 90221
Phone: 310.537.3750
Fax: 310.537.2909

RBC West Trenton
400 Sullivan Way
West Trenton, NJ 08628
Phone: 609.882.5050
Fax: 609.882.5533

Southwest Products Inc./US Bearing
5001 B Commerce Drive
Baldwin Park, CA 91010
Phone: 626.358.0181
Fax: 626.303.6141

Transport Dynamics
3131 W. Segerstrom Avenue
Santa Ana, CA 92704.9998
Phone: 714.546.3131
Fax: 714.545.9885

International

RBC France SAS
19, Avenue de Norvege
ZA de Courtaboeuf 1
91953 Les Ulis Cedex
France
Phone: 011.33.1.60.92.17.35
Fax: 011.33.1.69.86.12.84

Schaublin SA
Rue de la Blancherie 9
CH-2800 Delémont
Switzerland
Phone: 011.41.32.421.13.00
Fax: 011.41.32.421.1301

©2008, 2011, 2016 RBC Bearings Incorporated. All rights reserved.

PLAIN BEARINGS ENGINEERING

RBC offers many types and sizes of plain bearings to the aerospace industry. Both metal-to-metal and self-lubricating bearings are featured in this catalog. These bearings have been qualified to stringent SAE, Military, NAS, AECMA, and customer design and performance standards in RBC test laboratories.

For information on special plain bearings or the many standard series of commercial plain bearings, that are available from RBC, consult the appropriate RBC Aerospace Bearings sales engineer.

The RBC bearing series, which apply to various standards are shown below:

SAE/MS/EN

Specification	Description
M81934/1	Journals, Plain, Self-lubricating
M81934/2	Journals, Flanged, Self-lubricating
M81935/1	Rod End, Male threads, Wide, Self-lubricating
M81935/2	Rod End, Female threads, Wide, Self-lubricating
M81935/4	Rod End, Male threads, Narrow, Self-lubricating
M81935/5	Rod End, Female threads, Narrow, Self-lubricating
MS14101	Spherical bearings, Self-lubricating, Narrow, Grooved
MS14102	Spherical bearings, Self-lubricating, Wide, Chamfered
MS14103	Spherical bearings, Self-lubricating, Wide, Grooved
MS14104	Spherical bearings, Self-lubricating, Narrow, Chamfered
MS14101A	Extended Life, Spherical bearings, Self-lubricating, Narrow, Grooved
MS14102A	Extended Life, Spherical bearings, Self-lubricating, Wide, Chamfered
MS14103A	Extended Life, Spherical bearings, Self-lubricating, Wide, Grooved
MS14104A	Extended Life, Spherical bearings, Self-lubricating, Narrow, Chamfered
M81820/1	Spherical bearing, Self-lubricating, Narrow, Grooved, Lined bore
M81820/2	Spherical bearing, Self-lubricating, Wide, Chamfered, Lined bore
M81820/3	Spherical bearing, Self-lubricating, Wide, Grooved, Lined bore

SAE/MS/EN

Specification	Description
M81820/4	Spherical bearing, Self-lubricating, Narrow, Chamfered, Lined bore
M81936/1	Spherical bearing, BeCu ball grooved outer ring
M81936/2	Spherical bearing, BeCu ball chamfered outer ring
EN2285	Journals, Plains, Self-lubricating aluminum alloy
EN2286	Journals, Flanged, Self-lubricating aluminum alloy
EN2287	Journals, Plain, Self-lubricating corrosion resistant steel
EN2288	Journals, Flanged, Self-lubricating corrosion resistant steel
EN6056	Rod End, Self-lubricating, Threaded shank
EN2022	Spherical bearing, Self-lubricated, Light series, Chamfered and grooved
EN2023	Spherical bearing, Self-lubricated, Standard series, Chamfered and grooved outer ring
EN2335	Spherical bearing, Metal-to-metal, Chamfered and grooved outer ring
EN2501	Spherical bearing, Self-Lubricated, High Misalignment
EN4613	Spherical bearing, Self-lubricating, Narrow inch sizes
EN4614	Spherical bearing Self-lubricated, Wide inch sizes

©2008, 2011, 2016 RBC Bearings Incorporated. All rights reserved.

CONFIGURATIONS

Spherical bearings, shown in this catalog, are assembled by forming the outer ring (race) over the inner ring (ball). The processes used by RBC assure excellent conformity of the spherical surfaces of the outer ring bore to the spherical inner ring O.D.

Rod Ends in this catalog have several different designs and options. Rod ends are manufactured by inserting an MS or EN self-lubricating bearing into the rod end body. Rod ends are available with right or left-handed, male-threaded or female-threaded shanks. Male-threaded shanks are also available with keyway slots and female threads are available with end slots for locking devices.

Journal Bearings are offered in both flanged and non-flanged versions. In this catalog the journal bearings are all self-lubricating.

Loader Slot Bearings are spherical metal-to-metal bearings for specific applications. In this design, loading slots are machined into the outer ring so that the inner ring may be inserted. See Figure 1 for the configuration of slot loader bearings.

FIGURE 1: Loader Slot Bearing

Split Ball Spherical Bearings are another special type of spherical bearing. See Figure 2 for the configuration of the spit ball spherical bearing.

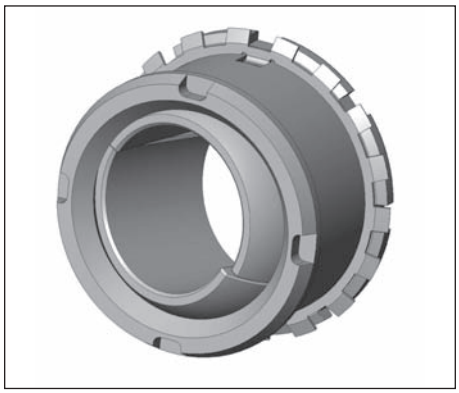

FIGURE 2: Split Ball Spherical Bearing

©2008, 2011, 2016 RBC Bearings Incorporated. All rights reserved.

Links are available in many configurations for special customer applications. Since each link design is unique, many design options are possible, including high temperature liners and light weight materials such as aluminum and titanium. See Figure 3 for a typical aircraft link design.

FIGURE 3: Typical Aircraft Link

METAL-TO-METAL BEARINGS

Metal-to-metal bearings are primarily used where grease maintenance is practical or where temperatures exceed the limits for self-lubricating bearings. In this aerospace catalog, metal-to-metal bearings are shown for the spherical bearing configuration only. These bearings are available with grooves and holes so that they may be re-lubricated.

Metal-to-metal, spherical bearings have 17-4PH outer rings and beryllium copper inner rings (balls). The properties of 17-4PH, which make it an excellent choice for bearing outer rings (races), are its ability to resist wear, abrasion, and galling. Also, the corrosion resistance of 17-4PH is excellent when compared to other hardenable CRES steels. Beryllium copper is used for the inner rings (balls) because of its high strength and hardness, and because it is highly resistant to stress relaxation, fatigue, abrasion, and corrosion. Dry-film lubricants, which are bonded to the outer ring, are used for high temperatures, and greases such as MIL-PRF-81322 are used for temperatures up to 350°F (177°C).

The mean coefficient of thermal expansion for beryllium copper in the +70°F to +400°F (+21°C to +204°C) temperature range is 9.4 x 10-6 inches per inch per °F (16.9 x 10-6 mm per mm per °C). This is approximately 33% higher than that of 17-4PH. Therefore, care must be taken to review clearances between the bearing bore and shaft and also between the inner and outer rings, so that bearing lock up will not occur at elevated temperatures.

For some MS rod end bodies, PH13-8Mo is an option. This material offers better fatigue life and corrosion resistance than 17-4PH. Other series of metal-to-metal bearings are available with outer rings manufactured from cadmium plated 4340 steel, aluminum bronze, cadmium plated aluminum bronze and 17-4PH CRES steel. Inner rings are available in CRES 440C steel, chrome plated 440C, and chrome plated 52100 steel. Consult the appropriate RBC Aerospace Bearings engineering department for the best materials for your special applications.

SELF-LUBRICATING BEARINGS

Self-lubricating bearings are available in spherical, journal, flanged journal, and rod end bearing configurations. They were originally developed to eliminate the need for relubrication, to provide lower torque, and to solve application problems where conventional metal-to-metal bearings would not perform satisfactorily; such as with high frequency vibration.

The liner systems for self-lubricating bearings do not require supplemental lubrication. The polytetrafluoroethylene (PTFE) fibers in the liner act as the lubricant. When a bearing is operated, the pressure and movement of the inner ring shears PTFE from the liner system. As the bearing operates, the PTFE is burnished into the metal and also into the liner surfaces, thereby reducing the coefficient of friction. After the coefficient of friction becomes sufficiently low, no further PTFE is sheared from the liner. Through continued use, some PTFE on the surfaces may exit the bearing. When this occurs, friction increases and more PTFE is sheared from the liner and deposited on the ring and liner surfaces.

Self-lubricating spherical bearings are available in many combinations of ring and liner materials. Typically, inner rings (balls) used in SAE/Military Standards are 440C or PH13-8Mo, and outer rings (races) are 17-4PH. High temperature materials are also available.

Self-lubricating journal bearings are available with a variety of backing materials. Standard materials for SAE/Military standards include 17-4PH CRES steel and 7075-T6 and 2024-T851 aluminum alloys.

Rod ends have the bodies manufactured from 17-4PH or PH13-8Mo CRES steel or cadmium plated 4340 steel.

Light weight rod ends and spherical bearings are now being offered by RBC with titanium components to meet demanding aerospace application requirements.

LINER SYSTEMS

RBC provides six standard liner systems, that are qualified to SAE and AECMA performance standards. These are shown in Table 1 below:

Bearing Configuration	Standard Liner Systems
Spherical	Uniflon® E
	Fabroid® IIG2
	Fibriloid®
	Kahr-Lon® X1200S
Journal	Uniflon® E
	Fiberglide® V
	Fabroid® IIG2
	Fibriloid®
	Uniflon® HP
	Kahr-Lon® X1200S
Rod end	Uniflon® E
	Fabroid® IIG2
	Fibriloid®
	Kahr-Lon® X1200S

TABLE 1: Standard RBC liner systems

RBC Bearings manufactures five different self-lubricating liner materials that are qualified to AS81820. In addition, over 60 other self-lubricating materials are available for specific characteristics; such as high temperature for turbine engine applications or machinability for airframe, helicopter, and landing gear applications.

The construction of most RBC liner systems revolves around a woven fabric where PTFE fibers are woven with other supporting and bondable fibers. The process used to produce the PTFE fibers results in a fiber, which has 25 times the tensile strength of that of the base resin. The weave of the fabric exposes the PTFE fibers on the working surface. The supporting fibers are interwoven with the PTFE fibers and are predominantly exposed on the surface that is bonded. This construction provides a positive locking of the PTFE fibers for strength and resistance to cold flow. It also provides a high strength bond to the backing material of the bearing.

Figure 4 depicts the basic liner system used for Fiberglide® and Fabroid® liners. In this system the entire fabric structure is flooded with resin, which locks the fibers in place. Then the liner is bonded to the outer ring, or backing material, with an adhesive resin. This type of liner system is referred to as a flooded liner, since the working surface of the fabric is flooded with binding resin. It provides a positive locking of the PTFE fibers for strength and resistance to cold flow; a bearing surface, that is almost entirely PTFE; and a high strength surface, that is bonded to the backing material of the bearing.

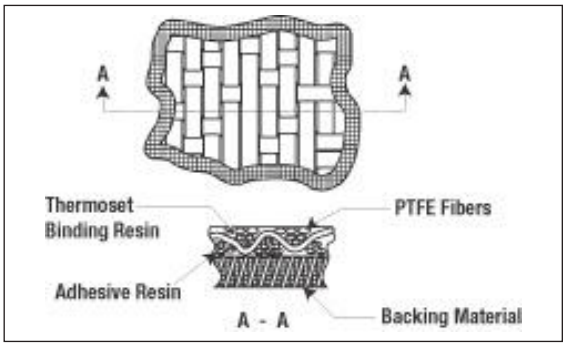

FIGURE 4: Fiberglide® and Fabroid® liner systems

Figure 5 depicts the construction of the Uniflon® E and Fibriloid® liner systems. This system is a flooded type of composite material with a thermoset resin binding the fibers in position. A thermoset adhesive resin is used to bond the liner to the outer ring or to the backing material. The interwoven fibers in this case are mainly to provide structural strength. Additives to the thermoset resin provide the lubrication. This construction provides exceptional strength and wear resistance.

FIGURE 5: Uniflon® E and Fibriloid® liner systems

©2008, 2011, 2016 RBC Bearings Incorporated. All rights reserved.

There are nine liner systems presented in this catalog (and many others for special application).

Uniflon® E liner system. The Uniflon® E liner system comprises of a heat stabilized nylon polyamide fabric that is coated with a high temperature resin containing PTFE particles. The fabric provides high compressive strength while the resin/PTFE wear coating provides the low coefficient of sliding friction. The bond side of the liner is coated with a high temperature resin only. This liner system was developed for airframe control applications and to meet the low wear requirements and high bearing pressures of the SAE AS81820 bearing specification (formerly MIL-B-81820).

Fiberglide® V liner system is a flooded liner system constructed of PTFE fibers interwoven with polyester fibers. The fabric is flooded with a phenolic thermoset resin. This system is ideally suited for demanding helicopter applications, where high oscillating speeds are encountered along with moderate impact or reverse loading. This system is highly fatigue resistant and able to absorb vibration.

Fabroid® IIG2 liner system is a flooded liner system. The fabric is a satin weave of PTFE fibers interwoven with glass fibers. The fabric is flooded with a modified thermoset resin. This system is the most widely accepted self-lubricating liner system in the aerospace industry, and is used on a wide variety of fixed wing aircraft applications. This system provides high speed oscillation capability under moderate loads with low wear rates.

Uniflon® HP is an advanced polymer resin system that is combined with a structural and self-lubricating additive to yield a high strength, low wear, and low friction bearing material. Since the material is homogeneous from bearing surface to substrate, it can be machined by the customer to their own demanding requirements. Uniflon® HP is also specially suited for coating unique part geometries and for other special applications. (At the time of catalog printing, the Uniflon® HP liner system is pending approval to the AS81934 specification.)

Fibriloid® liner system is constructed of interwoven compound fiber bundles of PTFE and polyamide fibers. The fabric is flooded with a thermoset resin. Fibriloid® is recognized as the strongest and most fatigue resistant bearing liner system in the aerospace industry. This proprietary system is covered by US Patent numbers 3,037,893 and 3,582,166. Characteristics of this liner system include very low wear rates at high psi loads, excellent temperature capability, and fatigue resistance in pounding or reverse load conditions.

Fabroid® X is a special liner system, that is engineered for very high temperature and high frequency vibration applications. Gas turbine engines and nacelles are examples of applications where Fabroid® X excels in performance.

Fiberglide® VI is a special liner system that is fine tuned to support reversing loads with low friction; Because of its low coefficient of friction, Fiberglide® VI is used in manual control linkages and in helicopter pitch link applications. The **Dyflon®** liner material is machinable and resistant to water/salt water/grease environments.

Kahr-Lon® X1200S liner consists of three major components, a woven base fabric, high strength thermosetting resin and blend of polytetrafluorethylene (PTFE) particles. The threads of the base fabric consist of high strength fillers that are interwoven to provide a foundation for the liner system. This specially constructed base fabric is then impregnated with two layers of high strength thermosetting resin. The layers of resin increase the liners strength, load capabilities, promotes strong substrate adhesion and provides a durable textile for the final wear surface. The final wear surface consist of a proprietary formulated blend of PTFE particles that is applied to the top surface of the liner to create a low friction, self-lubricating wear surface.

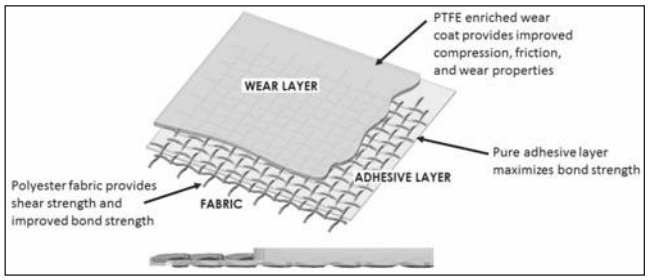

FIGURE 6: Kahr-Lon® liner system

Special liner materials are also available and are engineered to provide optimum life in specific applications. For more technical data on these special liner systems, consult the appropriate RBC Aerospace Bearings engineering department.

PERFORMANCE CHARACTERISTICS

Radial Static Limit loads shown in this catalog are the ratings based on the requirements of SAE and Military specifications, such as SAE AS81820 (formerly MIL-B-81820). They are the maximum static radial loads that can be applied to the bearings, which will result in a maximum permanent set of 0.003 in. (0.076 mm) after three minutes of loading. It should be noted that for -3 and -4 size spherical bearings the static load rating is limited due to deflection/bending of the mounting pin. The Static Radial Limit loads that can be supported by the RBC liner systems in aerospace bearings are shown in Table 2 below.

RADIAL STATIC LIMIT LOAD RATINGS

Liner System	Load, psi	Load, MPa
Fabroid® X	50,000	340
Fiberglide® V/VI	60,000	410
Fabroid® IIG2	60,000	410
Uniflon® E	80,000	550
Fibriloid®	80,000	550
Kahr-Lon® X1200S	80,000	550
Uniflon® HP	160,000*	1100

*.0015 in. permanent set

TABLE 2: Static Limit Load Ratings in pounds per square inch (Megapascals) for RBC liner systems

©2008, 2011, 2016 RBC Bearings Incorporated. All rights reserved.

The radial static limit load of a spherical bearing may be calculated using the following formula:

Radial static limit load = 0.85 x d x H x ML

Where: d = Ball spherical diameter
H = Outer ring width
ML = Max. load, psi (MPa)

The radial static limit load for journal bearings may be calculated using the following formula:

Radial Static Limit Load = B x (L- .100 in.) x ML

Where: B = Inner Diameter
L = Length
ML = Max. Load, psi (MPa)

For rod ends, the radial static limit load is based on the strength of the rod end body.

Radial static ultimate load ratings are 1.5 times the radial static limit load rating.

Axial Static Limit loads (spherical bearings) shown in this catalog are the maximum static axial loads that will result in a maximum permanent axial deformation of 0.005 in. (0.127 mm) after three minutes of loading. It may be calculated using the following formula:

Axial static limit load = π x H^2 ÷ 4 x ML

Where: H = Outer ring width
ML = Max. load, psi (MPa)

Oscillating load ratings given in the tables of this catalog are also based on the requirements of SAE, Military, and EN specifications. To meet this standard, bearings must have less than 0.0045 in. (.127 mm) wear when tested for 25,000 cycles at +/-25° of oscillation and 10 cycles per minute.

Radial oscillating load ratings may be calculated using the same radial projected area formula as used to calculate the radial limit load. The maximum load in psi for the oscillating load rating is shown in the Table 3 below.

RADIAL OSCILLATING LOAD RATINGS		
Liner System	**Load, psi**	**Load, MPa**
Fabroid® X	25,000	172
Fiberglide® V	30,000	207
Fabroid® IIG2	30,000	207
Kahr-Lon® X1200S	30,000	207
Uniflon® E	37,500	258.5
Fibriloid®	37,500	258.5
Uniflon® HP	37,500	258.5

TABLE 3: Oscillating Load Ratings

Wear rate or bearing life is the most difficult area to define for lined bearings because of the variety of operating conditions in which these bearings operate. Life under controlled laboratory test conditions can be predicted fairly accurately. In actual applications, variations in load, speed, angle of oscillation, temperature, contamination, and other environmental conditions all affect wear. The air frame control liner systems shown herein are generally intended for high load, low speed aircraft applications as specified in the SAE, Military, and EN specifications. RBC has other liner systems for special applications, such as high speed and high temperature. Wear/life and PV data can be used to determine if a particular liner system should meet the requirements of a particular application. These curves are based on laboratory data and, therefore, specific operational and environmental conditions should be analyzed for each application.

Pressure (P) times velocity (V) or PV values are shown in Table 4 for the RBC liner systems. Many factors can affect PV, such as load, speed, surface finish, and material, and much of the test data is for slow speed, high load aerospace applications. Therefore, RBC has shown conservative PV values for the liner systems in Table 4. Short PV excursions up to 150% of the values shown can usually be applied without a detrimental effect on the bearing.

RADIAL OSCILLATING LOAD RATINGS			
Liner System System	**Typ. Dynamic P(lbs./Sq. in.)**	**Maximum V (ft/min)**	**Continuous PV**
Fibriloid®	15,000-40,000	10	75,000
Fabroid® IIG2	5,000-25,000	15	60,000
Fiberglide® V	2,000-20,000	18	35,000
Uniflon® E	5,000-40,000	12	80,000
Uniflon® HP	5,000-40,000	10	75,000
Fabroid® X	5,000-20,000	10	50,000

TABLE 4: PV values for RBC liner systems

To determine the actual PV for a specific spherical bearing application P (psi or MPa) and V (feet per minute or meters per minute) may be determined as follows:

P = Radial load / 0.85 x d x H

and

V = (4 x A x CPM / 360) (d x π/ 12)

Where: d = Ball spherical diameter
H = Outer ring width
A = Angle of oscillation
CPM = Frequency of oscillation in cycles per minute

Please note that for journal bearings the same formulae may be used except that the 0.85 (% factor) is eliminated and that "L" replaces "H". The angle of oscillation is the angular movement of a bearing inner ring from its neutral or start position. If the angle of oscillation is 25°, a complete cycle will be 100°, because the inner ring moves from the neutral position to +25°, back to neutral, to -25° and back to neutral again. In the above formula for V, the angle of oscillation has been multiplied by 4 to account for the complete travel of the inner ring in 1 full cycle.

©2008, 2011, 2016 RBC Bearings Incorporated. All rights reserved.

Surface velocity of self-lubricated bearings is limited to moderate speeds because the liner systems are not thermally conductive, and the generated heat must be allowed to dissipate. Applications with intermittent high speed are acceptable, if the duty cycle or fluid environments allows for adequate heat dissipation.

Wear rates for the RBC liner systems are shown in Figures 7 and 8 below.

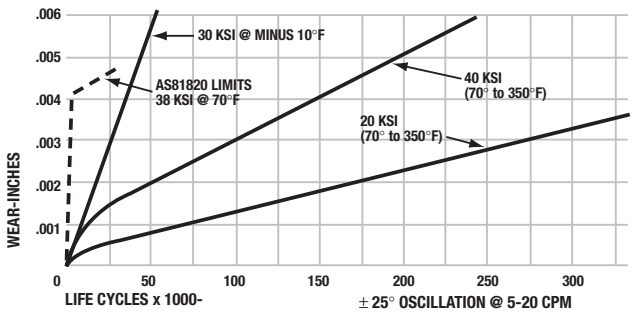

FIGURE 7: Typical wear rate for Uniflon® E and Fibriloid® liner

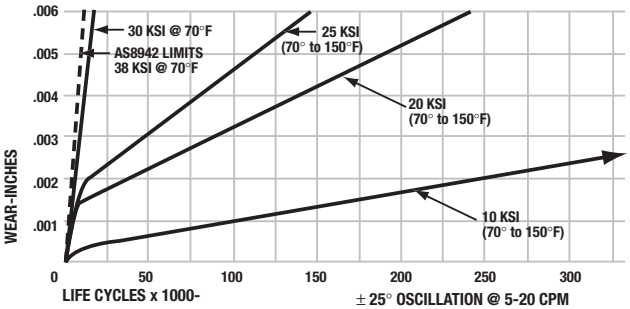

FIGURE 8: Typical wear rate for Fiberglide® V, Fabroid® IIG2

Surface Texture and Hardness of Mating Surfaces — For maximum life on journal bearings, the shaft on which the bearing runs should have a minimum hardness of Rockwell C 40 and a maximum surface texture of 8 RMS. Tables 5 and 6 show the average reductions in life for surface texture and material hardness.

Surface Texture (RMS)	Life Factor
4-10	1.00
16	0.75
32	0.40

TABLE 5: Life factor reduction due to surface texture

Hardness Rc	Life Factor
50	1.00
40	0.60
30	0.40

TABLE 6: Life factor reduction due to hardness

Table 7 gives maximum surface velocities for the standard RBC liner systems operating in dry environments.

Liner System	Max. Surface Velocity, ft/min @5000 psi	@100 psi
Fiberglide® V	15	600
Fabroid® IIG2	12	500
Uniflon® E	8	200
Fibriloid®	5	150

Liner System	Max. Surface Velocity, m/min @34,500 kPa	@690 kPa
Fiberglide® V	4.6	182.9
Fabroid® IIG2	3.7	152.4
Uniflon® E	2.5	75
Fibriloid®	1.5	45

TABLE 7: Surface velocity limits for dry bearings

©2008, 2011, 2016 RBC Bearings Incorporated. All rights reserved.

Operating temperature capabilities vary among liner systems and are affected by environmental conditions. Extremely low temperatures cause the coefficient of friction to rise and wear rates to increase. High speed operation or high loads will increase the bearing temperature above the ambient temperature. Fluids may lower operating temperature, but they may also be more aggressive at high temperatures. The metal component material of the bearing must also be considered when operating at extreme temperature. For example, an aluminum backed bearing should not be used in applications above 250°F (121°C). Table 8 lists the continuous operating temperature ranges for RBC liner systems in an air environment and under moderate load (5000 psi or 34,500 kPa). Load ratings of bearings should be derated for applications operating at elevated temperatures.

OPERATING TEMPERATURE RANGES		
Liner System	**°F**	**°C**
Fiberglide® V	-320 to +300	-195 to +150
Fabroid® IIG2	-320 to +450	-195 to +230
Uniflon® E	-320 to +450	-195 to +230
Fibriloid®	-320 to +450	-195 to +230
Fabroid® X	-320 to +600	-195 to +300
Uniflon® HP	-65 to +325	-55 to +165
Kahr-Lon® X1200S	-65 to +325	-55 to +165

TABLE 8: Operating temperature ranges under 5000 psi (34.5 MPa) radial load

Coefficient of friction for a spherical bearing is:

$$\mu = \text{Torque} / (\text{Ball Spherical Radius} \times \text{Load})$$

For a journal bearing, the shaft radius is substituted for the ball spherical radius in the above formula. The coefficient will vary depending on the liner system, and it is also affected by load and temperature. It should be noted that self-lubricating bearings require a break-in period to start the lubrication process. Typically the coefficient of friction will decrease by 50% after break-in. Figure 9 shows the effect of load on the coefficient of friction for the RBC liner systems. Figure 10 shows the effect of temperature on the coefficient of friction.

Fabroid X data points added

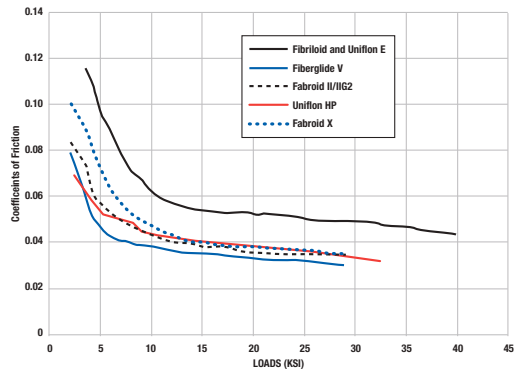

FIGURE 9: Effect of load on the coefficient of friction

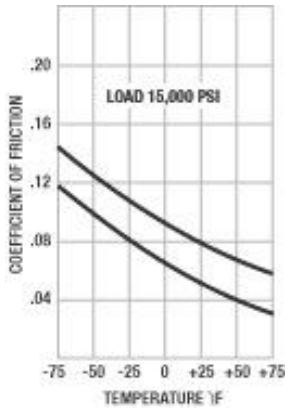

FIGURE 10: Coefficient of friction vs. temperature

©2008, 2011, 2016 RBC Bearings Incorporated. All rights reserved.

Fluid compatibility and contamination will affect wear rate or bearing life. RBC liner systems have been extensively tested in many environments. Testing includes both application qualification tests and SAE tests for MS qualifications. The thermoset resins and adhesives used by RBC are essentially impervious to the fluids encountered in aerospace applications. The following is a partial list of the fluids in which various RBC liner systems have been tested:

AS1241 Phosphate Ester Hyrdaulic Fluid
ASTM D471
MIL-PRF-7808 Lubricating Oil
MIL PRF-5606 Hydraulic Oil
MIL-PRF-83282 Hydraulic Oil
AMS1424 De-Icing Fluid
MIL-PRF-5624 Turbine Fuel
MIL-PRF-23699
MIL-PRF-6085
SKYDROL 500 B
Methanol
1-1-1 Trichloroethane
Water
MIL-PRF-87937 Aerospace Detergent
MIL-STD-810, Salt Spray
MIL-STD-810, Fungus
Sand and Dust
Liquid Nitrogen, N2
Vacuum
Aerospace Cleaning Detergents

While these fluids will not attack the liner system, it should be noted that fluids may increase the wear rate of the liners. The fluids tend to flush out the PTFE particles that coat the mating surfaces. This interferes with the natural PTFE self-lubricating process and thus increases wear.

Solid particle contaminants of dirt and dust tend to become imbedded into the relatively soft liner surfaces. If the particle contamination is abrasive, it will begin to wear the mating surface of the ball or shaft. Should contamination be particularly severe, bearings can be provided with hard coatings or seals.

©2008, 2011, 2016 RBC Bearings Incorporated. All rights reserved.

BEARING INSTALLATION

Proper installation of plain bearings will help to assure that maximum life will be obtained. Improper assembly may damage liners, cause excessive loading, or in other ways decrease the useful life of the bearing.

Housing fit for a metal-to-metal spherical bearing is recommended to be from 0.0000 to 0.0010 in. (.025mm) loose. Press fitting these bearings into the housing may remove the initial radial clearance causing the bearings to lock up. Thermal expansions of materials must also be considered

Housing fit for a self-lubricating spherical bearing is recommended to be from 0.0002 in. tight to 0.0008 in. loose or 0.005mm tight to 0.020mm loose for a metric bearing. For example, a bearing having an outside diameter of 1.0000 in. to 0.9995 in. should be inserted into a housing having an inside diameter of 0.9998 in. to 1.0003 in. A bearing having an outside diameter of 25.000mm to 24.987mm should be inserted into a housing having an inside diameter of 24.995mm to 25.020mm. Where tighter than recommended fits are used, the bearing will become radialy pre-loaded. This will result in increased bearing starting torque. The recommended fit is applicable for bearings with outside diameters up to 2.500 in. (63.5mm). For larger bearings or for special materials or applications consult the appropriate RBC Aerospace Bearings sales engineer.

An increase in pre-load torque is beneficial in high frequency vibration conditions and in solid particle contaminated environments. Pre-load torque is not additive to the frictional torque due to an applied load.

The housing fit for journal bearings should be 0.0005 in. (0.013 mm) tight to 0.0020 in. (0.050 mm) tight for bearings up to 4.0 in. or (100mm) in diameter. Care must be taken in selecting housing and shaft diameters to assure that there is not an interference fit between the bearing bore and the shaft. The following formulas may be used to determine the reduction in bore diameter due to a tight housing fit:

$$y_a = \frac{2\Delta\left(\frac{b}{a}\right)}{\left[\left(\frac{b}{a}\right)^2 + 1\right] + k_2\left[\left(\frac{b}{a}\right)^2 - 1\right]}$$

Case 1. Different housing and bearing materials

$$y_a = \Delta\left(\frac{a}{b}\right)$$

Case 2. Same housing and shaft material

Where:

a = bearing bore
b = housing bore
d_1 = Poission's ratio for bearing material
d_2 = Poission's ratio for housing material
y_a = amount of reduction in bore size
Δ = amount of interference fit
E_1 = modulus of elasticity of bearing material
E_2 = modulus of elasticity of housing material

$$K_2 = \text{constant} = \frac{E_1}{E_2}(1 + d_2) - d_1$$

In both of the above cases a massive housing is assumed.

Dissimilar materials must be considered when operating **at low or high temperatures** or when a large bearing is being used. When the materials for the housing and bearing backing or the shaft and the inner ring are not the same, loss of fit in the housing and contraction of the bearing bore must be considered. Calculations of loss of fit and bearing bore contraction are necessary to prevent the bearings from turning in the housing and also to prevent a tight fit between the bearing and the shaft.

To determine how much a housing bore or a bearing diameter changes in size as a result of temperature change, use the following formula:

$$\delta = \alpha \times \Delta \times \Delta T$$

Where:

δ = change in diameter
α = coefficient of thermal expansion
Δ = housing or bearing diameter
ΔT = temperature change

Contraction of the bearing may be calculated using the formulas shown above in the housing fits for journal bearings section.

©2008, 2011, 2016 RBC Bearings Incorporated. All rights reserved.

Shaft fit for metal-to-metal spherical bearings is not to be less than 0.0005 in. (0.013mm) loose at operating temperature.

Shaft fit for self-lubricating spherical bearings with unlined bores is recommended to be 0.0001 in. to 0.0010 in. loose (0.003mm to 0.025mm loose) in standard applications. For example, a bearing having a bore diameter of 0.7495 in. to 0.7500 in. should be assembled onto a shaft having an outside diameter of 0.7494 in. to 0.7490 in. Similarly a bearing having a bore diameter of 20.003mm to 19.991mm should be assembled onto a shaft having an outside diameter 19.978mm to 19.988mm. This is applicable for bearings, which have unlined bores and with bore diameters up to 1.500 in. (38mm). If the bore of the bearing inner ring is lined a shaft fit of 0.0000 in. to 0.0015 in. loose (0.000mm to 0.038mm loose for metric bearings) is recommended. For special applications or for bearings with bores larger than 1.500 in. (38mm) consult RBC engineering.

Shaft fits for journal bearings, where slow oscillating or low rotational speeds are coupled with high loads, are recommended to be from 0.0005 in. (0.013 mm) loose to 0.0030 in. (0.76 mm) loose. Contraction of the bearing bore caused by a heavy press fit in the housing or by thermal contraction must be considered. See housing fit above.

BEARING INSTALLATION

A hammer or other mechanism that induces a shock load on the bearing should never be used. The corner of the housing bore should have a radius or chamfer that has a smooth transition to the housing bore. The bearing should be aligned to the bore and a constant steady force applied to seat the bearing. A tool, which pilots on the bearing bore and which applies load to the outer ring face, is recommended. See Figures 11 and 12.

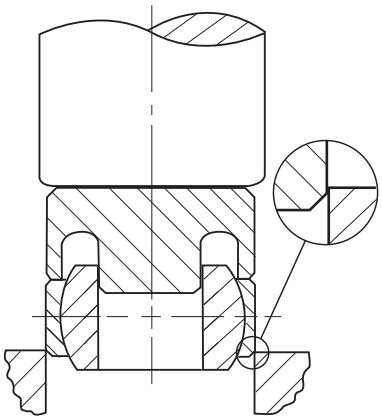

FIGURE 11: Spherical bearing assembly tool

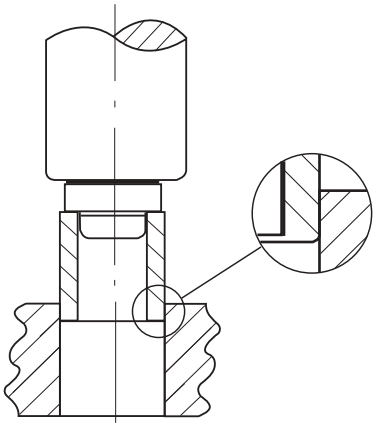

FIGURE 12: Journal bearing assembly tool

Bearing installations per the specification NAS 0331 are recommended.

©2008, 2011, 2016 RBC Bearings Incorporated. All rights reserved.

GROOVE DIMENSIONS — SPHERICAL BEARINGS

	BEARING BORE SIZE		B	R
INCH SERIES (Dimensions in inches)	NARROW WIDE	-03 TO -04 -03 TO -05	.015 .030	.005 .015
	NARROW WIDE	-05 TO -07 -06 TO -10	.025 .040	.010 .020
	NARROW WIDE	-08 TO -16 -12 TO -16	.045 .060	.010 .020
METRIC SERIES (Dimensions in mm)	NARROW WIDE	-12 TO -20 -5 TO -8	0.5 0.7	0.13 0.25
	NARROW WIDE	-25 -10 TO -17	0.7 0.9	0.13 0.38
	WIDE	-20 TO -25	1.2 1.4	0.13 0.38

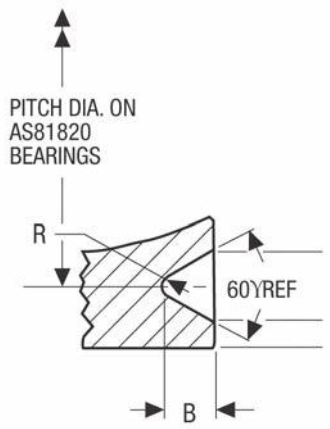

SWAGING PROCEDURE

1. Press bearing into housing and locate on center.
2. While supporting bearing on anvil, apply pressure to swaging tool (no rotation). To stake outer race over housing. Repeat on opposite side.

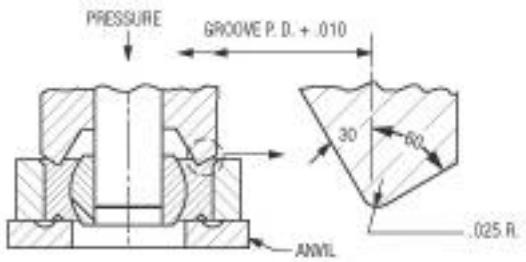

ROLLER STAKING PROCEDURE

1. Press bearing into housing and locate on center.
2. While supporting bearing on anvil, rotate roller staking tool to stake outer race over housing. Repeat on opposite side.

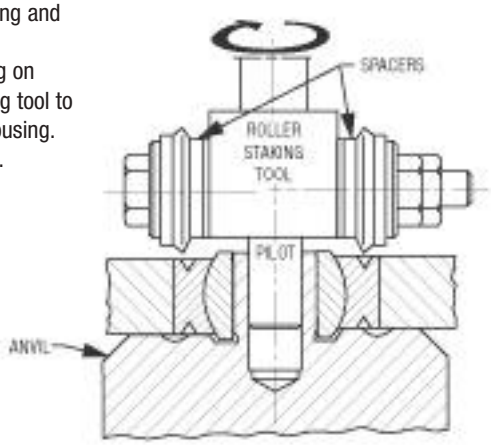

©2008, 2011, 2016 RBC Bearings Incorporated. All rights reserved.

RBC Spherical Bearings

AS81820 Self-Lubricating Narrow/Wide Series

MS14104/MS14101 Narrow Series, Chamfered & Grooved 19
MS14102/MS14103 Wide Series, Chamfered & Grooved 20

AS81820 Type A Extended Life Self-Lubricating Narrow/Wide Series

MS14104A/MS14101A Narrow Series, Chamfered & Grooved 21
MS14102A/MS14103A Wide Series, Chamfered & Grooved 22

AS81820 Lined Bore Narrow/Wide Series

M81820/4, M81820/1 Lined Bore, Narrow Series, Chamfered & Grooved 23
M81820/2, M81820/3 Lined Bore, Wide Series, Chamfered & Grooved 24

Sealed Narrow/Wide Series

Sealed, Narrow Series, Chamfered & Grooved 25
Sealed, Wide Series, Chamfered & Grooved 26

EN Standards/Self-Lubricating Series

EN2022 Metric, Light Series, Chamfered & Grooved 27
EN2023 Metric, Normal Series, Narrow/Wide, Chamfered & Grooved 28
EN4613 Metric, Narrow Series, Chamfered & Grooved. 29
EN4614 Metric, Wide Series, Chamfered & Grooved 30

AS81936 Metal-to-Metal Series

M81936/1( ) BeCu, Lubricated through Ball & Race, Grooved 31
M81936/1( )R BeCu, Lubricated through Race, Grooved 32
M81936/2( ) BeCu, Lubricated through Ball & Race, Chamfered. . . . 33
M81936/2( )R BeCu, Lubricated through Race, Chamfered. 34

AS8976 (MS21154 & MS21155) Narrow Series

MS21154B Narrow Series, Alloy Steel and Aluminum Bronze Options, Grooved 35
MS21155B Narrow Series, Alloy Steel and Aluminum Bronze Options, Chamfered 35

EN Standards

EN2335 Metric, Swaged Series 36

Wide Series

Wide Series, CRES & Aluminum Bronze Options. 37

High-Misalignment

Self-Lubricating Series. 38
EN2501 Standard Series 39
Metal-to-Metal Series 40

Light Weight Self-Lubricating

Aluminum Narrow Series 41
Aluminum Wide Series 42

High Temperature Self-Lubricating Narrow/Wide Series

High Temperature Narrow Series 43
High Temperature Wide Series 44
Load Slot Feature Page 45
Corrosion Resistant Single V-Groove. 46
Corrosion Resistant Double V-Groove 47
Split Ball Feature Page 48

SPHERICAL BEARINGS

GENERAL FEATURES AND TECHNICAL SPECIFICATIONS

Outer Ring, Race

The outer ring is swaged over the ball to provide maximum race to ball conformity. The outer ring may contain a lubrication groove and holes to accommodate re-lubrication needs. Race can be furnished with face grooves or chamfers for staking either the race or the housing.

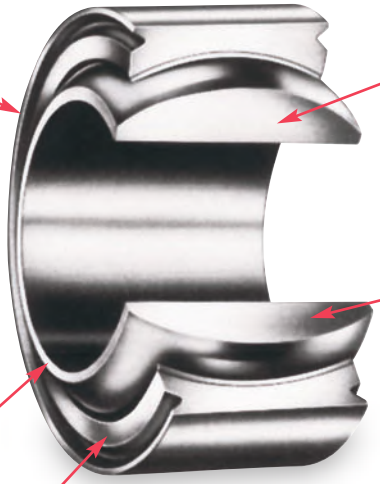

Design Features

Race and ball surfaces may also be provided with a dry-film lubricant for high temperature applications.

Materials

Various materials are used in swaged spherical bearings. Races: 17-4PH, 15-5PH, Aluminum Bronze, AISI303, Inconel-718. Aluminum.

Inner Ring, Ball

A fully hardened ball provides strength when clamped in the application. Ball may contain a lubrication groove and holes to accommodate re-lubrication needs.

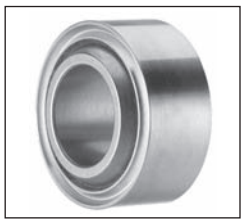

Balls: 440C, 52100 chrome plated, PH13-8Mo, Stellite, Beryllium Copper, Aluminum.

Construction

Swaged bearings may be of metal-to-metal design or equipped with a self lubricating liner system to reduce friction. These bearings provide misalignment and high load carrying capacity. Sealed versions are also available.

©2008, 2011, 2016 RBC Bearings Incorporated. All rights reserved.

MS14104 & MS14101 SELF-LUBRICATED SPHERICAL BEARING, NARROW

- **AS81820 (formerly MIL-B-81820)**
- Narrow series, self-lubricated
- High temperature — low wear
  -65°F to +325°F (-53.9°C to +162.8°C)
- Material
  Outer ring: CRES 17-4PH, AMS 5643, HRC 28 min.
  Inner ring: CRES 440C, AMS 5630, HRC 55 min.
  Liner: Fibriloid® or "E" Uniflon® qualified to AS81820

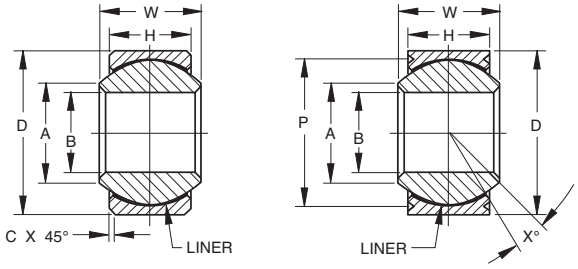

Chamfered Grooved

SPECIFICATIONS AND ORDERING INFORMATION

DIMENSIONS — TOLERANCES

03-823 Chamfered 03-825 Grooved Dash No.	NE NEG Dash No.	MS14104 Chamfered MS14101 Grooved Dash No.	B +.0000, -.0005 +.000, -.013		D +.0000, -.0005 +.000, -.013		H ±.005 ±.13		W +.000, -.002 +.00, -.05		A Min.		C(1) +.010, -.000 +.25, -.00		P(2) Groove Pitch Diameter +.000 in., -.008 in. +.00 mm, -.20mm		X° Ref.
Chamfered/Grooved Part Numbers			in.	mm	in.	mm	in.	mm	in.	mm	in.	mm	in.	mm	in.	mm	
-03	3	-3	.1900	4.826	.5625	14.288	.218	5.54	.281	7.14	.293	7.44	.010	.25	.500	12.70	10
-04	4	-4	.2500	6.350	.6562	16.667	.250	6.35	.343	8.71	.364	9.25	.010	.25	.594	15.09	10
-05(1)	5(1)	-5(1)	.3125	7.938	.7500	19.050	.281	7.14	.375	9.52	.419	10.64	.010	.25	.660	16.76	10
-05A(2)	5A(2)	-5A(2)	.3125	7.938	.7500	19.050	.281	7.14	.375	9.52	.419	10.64	.010	.25	.660	16.76	10
-06	6	-6	.3750	9.525	.8125	20.638	.312	7.92	.406	10.31	.475	12.06	.020	.51	.712	18.08	9
-07	7	-7	.4375	11.112	.9062	23.017	.343	8.71	.437	11.10	.530	13.46	.020	.51	.806	20.47	8
-08	8	-8	.5000	12.700	1.0000	25.400	.390	9.91	.500	12.70	.600	15.24	.020	.51	.876	22.25	8
-09	9	-9	.5625	14.288	1.0937	27.780	.437	11.10	.562	14.27	.670	17.02	.020	.51	.970	24.64	8
-10	10	-10	.6250	15.875	1.1875	30.162	.500	12.70	.625	15.88	.739	18.77	.020	.51	1.063	27.00	8
-12	12	-12	.7500	19.050	1.4375	36.512	.593	15.06	.750	19.05	.920	23.37	.030	.76	1.313	33.35	8
-14	14	-14	.8750	22.225	1.5625	39.688	.703	17.86	.875	22.22	.980	24.89	.030	.76	1.438	36.53	8
-16	16	-16	1.0000	25.400	1.7500	44.450	.797	20.24	1.000	25.40	1.118	28.40	.030	.76	1.626	41.30	9

(1)Chamfered Type only. (2)Grooved Type only. See page 17 for groove dimensions.

LOAD RATINGS

03-823 Chamfered 03-825 Grooved Dash No.	NE NEG Dash No.	Oscillating Radial Load Rating(3)		Radial Limit Load Rating(3)		Axial Limit Load Rating(3)		No Load Rotational Breakaway Torque Standard		"K" Type		Weight Max. Ref.	
Chamfered/Grooved Part Numbers		lbf.	N	lbf.	N	lbf.	N	in.-lbs.	N-m	in.-lbs.	N-m	lbs.	kg
-03	3	1500	6700	3975	17600	150	670	.25-5	.03-.56	0-0.5	0-.06	.02	.010
-04	4	3320	14600	6040	27000	430	1900	.25-5	.03-.56	0-0.5	0-.06	.02	.010
-05(1)	5(1)	5460	24500	8750	39000	700	3100	.25-8	.03-.90	0-1	0-.11	.03	.015
-05A(2)	5A(2)	5460	24500	8750	39000	700	3100	.25-8	.03-.90	0-1	0-.11	.03	.015
-06	6	6600	29000	10540	46500	1100	4900	.25-8	.03-.90	0-1	0-.11	.04	.017
-07	7	8050	36000	13200	58500	1400	6200	.25-8	.03-.90	0-1	0-.11	.05	.023
-08	8	10400	46500	17900	80000	2100	9300	.25-8	.03-.90	0-1	0-.11	.07	.032
-09	9	13000	58500	23200	104000	3680	16300	.25-8	.03-.90	0-1	0-.11	.09	.041
-10	10	16450	73500	30500	137000	4720	20800	.25-8	.03-.90	0-1	0-.11	.12	.056
-12	12	23600	104000	46400	208000	6750	30000	.25-8	.03-.90	0-1	0-.11	.21	.095
-14	14	30250	134000	62200	275000	9350	41500	.25-12	.03-1.4	0-2	0-.23	.27	.122
-16	16	38000	170000	82200	365000	12160	54000	.25-12	.03-1.4	0-2	0-.23	.39	.175

(1)Chamfered Type only. (2)Grooved Type only.

(3)Load ratings based on AS81820. -3 and -4 sizes are limited by pin bending.

Bearing configuration	Part number designations for a 0.2500 in. bore, grooved spherical bearing		
Base P/N (no options)	03-825-04	NEG4	MS14101-4
Low breakaway torque	03-825-04K	NEG4K	MS14101-4K
Cadmium plating	03-825-04P	NEG4C	MS14101-4P
1st oversize O.D. (0.010 in.)	03-825-04T	NEG4Q	MS14101-4T
2nd oversize O.D. (0.020 in.)	03-825-04U	NEG4U	MS14101-4U
PH13-8MO ball material	03-825-04C	NEG4PH	MS14101-4C
Zinc Nickel plating	03-825-04Z	NEG4Z	MS14101-4E

©2008, 2011, 2016 RBC Bearings Incorporated. All rights reserved.

RBC AEROSPACE BEARINGS

MS14102 & MS14103 SELF-LUBRICATED SPHERICAL BEARING, WIDE

- **AS81820 (formerly MIL-B-81820)**
- Wide series, self-lubricated
- High temperature — low wear
  -65°F to +325°F (-53.9°C to +162.8°C)
- Material
  Outer ring: CRES 17-4PH, AMS 5643, HRC 28 min.
  Inner ring: CRES 440C, AMS 5630, HRC 55 min.
  Liner: Fibriloid® or "E" Uniflon® qualified to AS81820

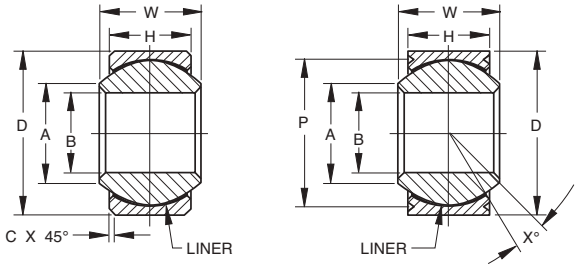

Chamfered Grooved

SPECIFICATIONS AND ORDERING INFORMATION

DIMENSIONS — TOLERANCES

03-824 Chamfered 03-826 Grooved Dash No.	WE WEG Dash No.	MS14102 Chamfered MS14103 Grooved Dash No.	B +.0000, -.0005 +.000, -.013		D +.0000, -.0005 +.000, -.013		H ±.005 ±.13		W +.000, -.002 +.00, -.05		A Min.		C(1) +.010, -.000 +.25, -.00		P(2) Groove Pitch Diameter +.000 in., -.008 in. +.00 mm, -.20mm		X° Ref.
Chamfered/Grooved Part Numbers			in.	mm	in.	mm	in.	mm	in.	mm	in.	mm	in.	mm	in.	mm	
-03	3	-3	.1900	4.826	.6250	15.875	.327	8.31	.437	11.10	.300	7.62	.010	0.25	.563	14.30	15
-04	4	-4	.2500	6.350	.6250	15.875	.327	8.31	.437	11.10	.300	7.62	.010	0.25	.563	14.30	15
-05	5	-5	.3125	7.938	.6875	17.462	.317	8.05	.437	11.10	.360	9.14	.010	0.25	.625	15.88	14
-06	6	-6	.3750	9.525	.8125	20.638	.406	10.31	.500	12.70	.466	11.84	.020	0.51	.712	18.08	8
-07A(2)	-7A(2)	-7A(2)	.4375	11.112	.9062	23.017	.442	11.23	.562	14.27	.537	13.64	.020	0.51	.806	20.47	10
-07	7	-7	.4375	11.112	.9375	23.812	.442	11.23	.562	14.27	.537	13.64	.020	0.51	.837	21.26	10
-08	8	-8	.5000	12.700	1.0000	25.400	.505	12.83	.625	15.88	.607	15.42	.020	0.51	.900	22.86	9
-09	9	-9	.5625	14.288	1.1250	28.575	.536	13.61	.687	17.45	.721	18.31	.020	0.51	1.025	26.04	10
-10	10	-10	.6250	15.875	1.1875	30.162	.567	14.40	.750	19.05	.747	18.97	.020	0.51	1.087	27.61	12
-12	12	-12	.7500	19.050	1.3750	34.925	.630	16.00	.875	22.22	.845	21.46	.030	0.76	1.251	31.78	13
-14	14	-14	.8750	22.225	1.6250	41.275	.755	19.18	.875	22.22	.995	25.27	.030	0.76	1.501	38.13	6
-16	16	-16	1.0000	25.400	2.1250	53.975	1.005	25.53	1.375	34.92	1.269	32.23	.030	0.76	2.001	50.83	12

(1)Chamfered Type only. (2)Grooved Type only. See page 17 for groove dimensions.

LOAD RATINGS

03-824 Chamfered 03-826 Grooved Dash No.	WE WEG Dash No.	Oscillating Radial Load Rating(3)		Radial Limit Load Rating(3)		Axial Limit Load Rating(3)		No Load Rotational Breakaway Torque Standard		"K" Type		Weight Max. Ref.	
Chamfered/Grooved Part Numbers		lbf.	N	lbf.	N	lbf.	N	in.-lbs.	N-m	in.-lbs.	N-m	lbs.	kg
-03	3	4900	21600	2500	11100	1770	7800	.25-5	.03-.56	0.05	0-.06	.031	.014
-04	4	4900	21600	5500	24400	1770	7800	.25-5	.03-.56	0.05	0-.06	.031	.014
-05	5	6050	27000	9400	41800	1640	7350	.25-8	.03-.90	0.10	0-.11	.035	.016
-06	6	8310	36500	13700	60900	2630	11600	.25-8	.03-.90	0.10	0-.11	.060	.027
-07A(2)	7A(2)	11750	52000	19700	87600	3650	16300	.25-8	.03-.90	0.10	0-.11	.080	.036
-07	7	11750	52000	20700	92000	3650	16300	.25-8	.03-.90	0.10	0-.11	.080	.036
-08	8	14950	65500	21400	95000	4970	22000	.25-8	.03-.90	0.10	0-.11	.100	.045
-09	9	18100	80000	26600	118000	5370	24000	.25-8	.03-.90	0.10	0-.11	.135	.061
-10	10	20250	90000	29000	128500	6130	27500	.25-8	.03-.90	0.10	0-.11	.160	.072
-12	12	26200	116000	37000	164500	7730	34500	.25-8	.03-.90	0.10	0-.11	.240	.110
-14	-14	33600	150000	65200	290000	10800	48000	.25-12	.03-1.4	0.20	0-.23	.350	.160
-16	16	56250	250000	104000	462500	19300	86500	.25-12	.03-1.4	0.20	0-.23	.970	.440

(1)Chamfered Type only. (2)Grooved Type only.

(3)Load ratings based on AS81820. -3 and -4 sizes are limited by pin bending.

Bearing configuration	Part number designations for a 0.2500 in. bore, grooved spherical bearing		
Base P/N (no options)	03-826-04	WEG4	MS14103-4
Low breakaway torque	03-826-04K	WEG4K	MS14103-4K
Cadmium plating	03-826-04P	WEG4C	MS14103-4P
1st oversize O.D. (0.010 in.)	03-826-04T	WEG4Q	MS14103-4T
2nd oversize O.D. (0.020 in.)	03-826-04U	WEG4U	MS14103-4U
PH13-8MO ball material	03-826-04C	WEG4PH	MS14103-4C
Zinc Nickel plating	03-826-04Z	WEG4Z	MS14103-4Z

©2008, 2011, 2016 RBC Bearings Incorporated. All rights reserved.

MS14104A & MS14101A EXTENDED LIFE, SELF-LUBRICATED SPHERICAL BEARING, NARROW

- **AS81820 TYPE A**
- Type A (100,000 Cycles)
- Narrow series, self-lubricated
- High temperature – very low wear
  -65°F to +325°F (-53.9°C to +162.8°C)
- Material: Outer ring: CRES 17-4PH, AMS 5643, HRC 28 min.
  Inner ring: CRES 440C, AMS 5630, HRC 55 min.
  Liner: Fibriloid® qualified to AS81820 Type A

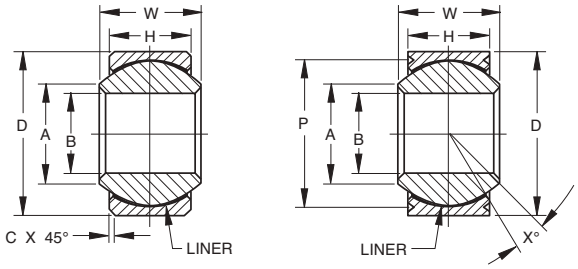

Chamfered Grooved

SPECIFICATIONS AND ORDERING INFORMATION

Narrow Series: DIMENSIONS — TOLERANCES

03-823 Chamfered 03-825 Grooved Dash No.	MS14104A Chamfered MS14101A Grooved Dash No.	B +.0000, -.0005 +.000, -.013		D +.0000, -.0005 +.000, -.013		H ±.005 ±.13		W +.000, -.002 +.00, -.05		A Min.		C(1) +.010, -.000 +.25, -.00		P(2) Groove Pitch Diameter +.000 in., -.008 in. +.00 mm, -.20mm		X° Ref.
Chamfered/Grooved Part Numbers		in.	mm	in.	mm	in.	mm	in.	mm	in.	mm	in.	mm	in.	mm	
-03L	-3	.1900	4.826	.5625	14.288	.218	5.54	.281	7.14	.293	7.44	.010	.25	.500	12.70	10
-04L	-4	.2500	6.350	.6562	16.667	.250	6.35	.343	8.71	.364	9.25	.010	.25	.594	15.09	10
-05L(1)	-5(1)	.3125	7.938	.7500	19.050	.281	7.14	.375	9.52	.419	10.64	.010	.25	.660	16.76	10
-05AL(2)	-5A(2)	.3750	9.525	.7500	19.050	.281	7.14	.375	9.52	.419	10.64	.010	.25	.660	16.76	10
-06L	-6	.4375	11.112	.8125	20.638	.312	7.92	.406	10.31	.475	12.06	.020	.51	.712	18.08	9
-07L	-7	.4375	11.112	.9062	23.017	.343	8.71	.437	11.10	.530	13.46	.020	.51	.806	20.47	8
-08L	-8	.5000	12.700	1.0000	25.400	.390	9.91	.500	12.70	.600	15.24	.020	.51	.876	22.25	8
-09L	-9	.5625	14.288	1.0937	27.780	.437	11.10	.562	14.27	.670	17.02	.020	.51	.970	24.64	8
-10L	-10	.6250	15.875	1.1875	30.162	.500	12.70	.625	15.88	.739	18.77	.020	.51	1.063	27.00	8
-12L	-12	.7500	19.050	1.4375	36.512	.593	15.06	.750	19.05	.920	23.37	.030	.76	1.313	33.35	8
-14L	-14	.8750	22.225	1.5625	39.688	.703	17.86	.875	22.22	.980	24.89	.030	.76	1.438	36.53	8
-16L	-16	1.0000	25.400	1.7500	44.450	.797	20.24	1.000	25.40	1.118	28.40	.030	.76	1.626	41.30	9

(1)Chamfered Type only. (2)Grooved Type only.

LOAD RATINGS

03-823 Chamfered 03-825 Grooved Dash No.	Oscillating Radial Load Rating(3)		Radial Limit Load Rating(3)		Axial Limit Load Rating(3)		No Load Rotational Breakaway Torque Standard		"K" Type		Weight Max. Ref.	
Chamfered/Grooved Part Numbers	lbf.	N	lbf.	N	lbf.	N	in.-lbs.	N-m	in.-lbs.	N-m	lbs.	kg
-03L	1500	6700	3975	17600	150	670	.25-5	.03-.56	0-0.5	0-.06	.02	.010
-04L	3320	14600	6040	27000	430	1900	.25-5	.03-.56	0-0.5	0-.06	.02	.010
-05L(1)	5460	24500	8750	39000	700	3100	.25-8	.03-.90	0-1	0-.11	.03	.015
-05AL(2)	5460	24500	8750	39000	700	3100	.25-8	.03-.90	0-1	0-.11	.03	.015
-06L	6600	29000	10540	46500	1100	4900	.25-8	.03-.90	0-1	0-.11	.04	.017
-07L	8050	36000	13200	58500	1400	6200	.25-8	.03-.90	0-1	0-.11	.05	.023
-08L	10400	46500	17900	80000	2100	9300	.25-8	.03-.90	0-1	0-.11	.07	.032
-09L	13000	58500	23200	104000	3680	16300	.25-8	.03-.90	0-1	0-.11	.09	.041
-10L	16450	73500	30500	137000	4720	20800	.25-8	.03-.90	0-1	0-.11	.12	.056
-12L	23600	104000	46400	208000	6750	30000	.25-8	.03-.90	0-1	0-.11	.21	.095
-14L	30250	134000	62200	275000	9350	41500	.25-12	.03-1.4	0-2	0-.23	.27	.122
-16L	38000	170000	82200	365000	12160	54000	.25-12	.03-1.4	0-2	0-.23	.39	.175

(1)Chamfered Type only. (2)Grooved Type only. (3)Load ratings based on AS81820. -3 and -4 sizes are limited by pin bending.

P/N Series	RBC P/N	DESCRIPTION
MS14104A-XX	03-823XX-XXL	Narrow Chamfered
MS14101A-XX	03-825XX-XXL	Narrow Grooved
MS14102A-XX	03-824XX-XXL	Wide Chamfered
MS14103A-XX	03-826XX-XXL	Wide Grooved

Bearing configuration	Part number designations for a 0.2500 in. bore, grooved spherical bearing	
Base P/N (no options)	03-825-04L	MS14101A-4
Low breakaway torque	03-825-04LK	MS14101A-4K
Cadmium plating	03-825-04LP	MS14101A-4P
1st oversize O.D. (0.010 in.)	03-825-04LT	MS14101A-4T
2nd oversize O.D. (0.020 in.)	03-825-04LU	MS14101A-4U
PH13-8MO ball material	03-825-04LC	MS14101A-4C
Zinc Nickel plating	03-825-04LZ	MS14101A-4E

©2008, 2011, 2016 RBC Bearings Incorporated. All rights reserved.

RBC AEROSPACE BEARINGS

MS14102A & MS14103A EXTENDED LIFE, SELF-LUBRICATED SPHERICAL BEARING, WIDE

- **AS81820 TYPE A**
- Type A (100,000 Cycles)
- Wide series, self-lubricated
- High temperature – very low wear
  -65°F to +325°F (-53.9°C to +162.8°C)
- Material: Outer ring: CRES 17-4PH, AMS 5643, HRC 28 min.
  Inner ring: CRES 440C, AMS 5630, HRC 55 min.
  Liner: Fibriloid® qualified to AS81820 Type A

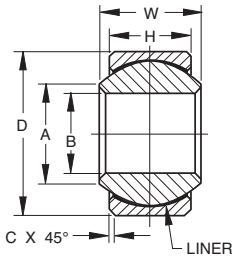

Chamfered

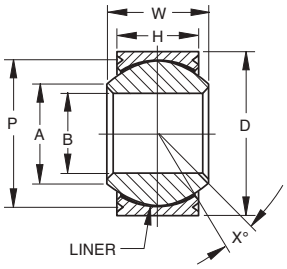

Grooved

SPECIFICATIONS AND ORDERING INFORMATION

Wide Series: DIMENSIONS — TOLERANCES

03-824 Chamfered 03-826 Grooved Dash No.	MS14102A Chamfered MS14103A Grooved Dash No.	B +.0000, -.0005 +.000, -.013		D +.0000, -.0005 +.000, -.013		H ±.005 ±.13		W +.000, -.002 +.00, -.05		A Min.		C(1) +.010, -.000 +.25, -.00		P(2) Groove Pitch Diameter +.000 in., -.008 in. +.00 mm, -.20mm		X° Ref.
Chamfered/Grooved Part Numbers		in.	mm	in.	mm	in.	mm	in.	mm	in.	mm	in.	mm	in.	mm	
-03L	-3	.1900	4.826	.6250	15.875	.327	8.31	.437	11.10	.300	7.62	.010	.25	.563	14.30	15
-04L	-4	.2500	6.350	.6250	15.875	.327	8.31	.437	11.10	.300	7.62	.010	.25	.563	14.30	15
-05L	-5	.3125	7.938	.6875	17.462	.317	8.05	.437	11.10	.360	9.14	.010	.25	.625	15.88	14
-06L	-6	.3750	9.525	.8125	20.638	.406	10.31	.500	12.70	.466	11.84	.020	.51	.712	18.08	8
-07AL(2)	-07A(2)	.4375	11.112	.9062	23.017	.442	11.23	.562	14.27	.537	13.64	.020	.51	.806	20.47	10
-07L	-7	.4375	11.112	.9375	23.812	.442	11.23	.562	14.27	.537	13.64	.200	.51	.837	21.26	10
-08L	-8	.5000	12.700	1.0000	25.400	.505	12.83	.625	15.88	.607	15.42	.020	.51	.900	22.86	9
-09L	-9	.5625	14.288	1.1250	28.575	.536	13.61	.687	17.45	.721	18.31	.020	.51	1.025	26.04	10
-10L	-10	.6250	15.875	1.1875	30.162	.567	14.40	.750	19.05	.747	18.97	.020	.51	1.087	27.61	12
-12L	-12	.7500	19.050	1.3750	34.925	.630	16.00	.875	22.22	.845	21.46	.030	.76	1.251	31.78	13
-14L	-14	.8750	22.225	1.6250	41.275	.755	19.18	.875	22.22	.995	25.27	.030	.76	1.501	38.13	6
-16L	-16	1.0000	25.400	2.1250	53.975	1.005	25.53	1.375	34.92	1.269	32.23	.030	.76	2.001	50.83	12

(1)Chamfered Type only. (2)Grooved Type only.

LOAD RATINGS

03-824 Chamfered 03-826 Grooved Dash No.	Oscillating Radial Load Rating(3)		Radial Limit Load Rating(3)		Axial Limit Load Rating(3)		No Load Rotational Breakaway Torque Standard		"K" Type		Weight Max. Ref.	
Chamfered/Grooved Part Numbers	lbf.	N	lbf.	N	lbf.	N	in.-lbs.	N-m	in.-lbs.	N-m	lbs.	kg
-03L	4900	21600	2500	11100	1770	7800	.25-5	.03-.56	0.5	0-.06	.031	.014
-04L	4900	21600	5500	24400	1770	7800	.25-5	.03-.56	0.5	0-.06	.031	.014
-05L	6050	27000	9400	41800	1640	7350	.25-8	.03-.90	.10	0-.11	.035	.016
- 06L	8310	36500	13700	60900	2630	11600	.25-8	.03-.90	.10	0-.11	.060	.027
-07AL(2)	11750	52000	19700	87600	3650	16300	.25-8	.03-.90	.10	0-.11	.080	.036
-07L	11750	52000	20700	92000	3650	16300	.25-8	.03-.90	.10	0-.11	.080	.036
-08L	14950	65500	21400	95000	4970	22000	.25-8	.03-.90	.10	0-.11	.100	.045
-09L	18100	80000	26600	118000	5370	24000	.25-8	.03-.90	.10	0-.11	.135	.061
-10L	20250	90000	29000	128500	6130	27500	.25-8	.03-.90	.10	0-.11	.160	.072
-12L	26200	116000	37000	164500	7730	34500	.25-8	.03-.90	.10	0-.11	.240	.110
-14L	33600	150000	62500	290000	10800	48000	.25-12	.03-1.4	.20	0-.23	.350	.160
-16L	56250	250000	104000	462500	19300	86500	.25-12	.03-1.4	.20	0-.23	.970	.440

(1)Chamfered Type only. (2)Grooved Type only. (3)Load ratings based on AS81820. -3 and -4 sizes are limited by pin bending.

P/N Series	RBC P/N	DESCRIPTION
MS14104A-XX	03-823XX-XXL	Narrow Chamfered
MS14101A-XX	03-825XX-XXL	Narrow Grooved
MS14102A-XX	03-824XX-XXL	Wide Chamfered
MS14103A-XX	03-826XX-XXL	Wide Grooved

Bearing configuration	Part number designations for a 0.2500 in. bore, grooved spherical bearing	
Base P/N (no options)	03-826-04L	MS14103A-4
Low breakaway torque	03-826-04LK	MS14103A-4K
Cadmium plating	03-826-04LP	MS14103A-4P
1st oversize O.D. (0.010 in.)	03-826-04LT	MS14103A-4T
2nd oversize O.D. (0.020 in.)	03-826-04LU	MS14103A-4U
PH13-8MO ball material	03-826-04LC	MS14103A-4C
Zinc Nickel plating	03-826-04LZ	MS14103A-4E

©2008, 2011, 2016 RBC Bearings Incorporated. All rights reserved.

M81820/4 & M81820/1 SELF-LUBRICATED SPHERICAL BEARING, LINED BORE, NARROW

- **AS81820/4 & AS81820/1 • AS81820 (formerly MIL-B-81820)**
- Narrow series, self-lubricated, lined bore
- High temperature — low wear
  -65°F to +325°F (-53.9°C to +162.8°C)
- Material
  Outer ring: CRES 17-4PH, AMS 5643, HRC 28 min.
  Inner ring: CRES PH13-8Mo, AMS 5629, HRC 43 min.
  Liner: Fibriloid® or "E" Uniflon® qualified to AS81820

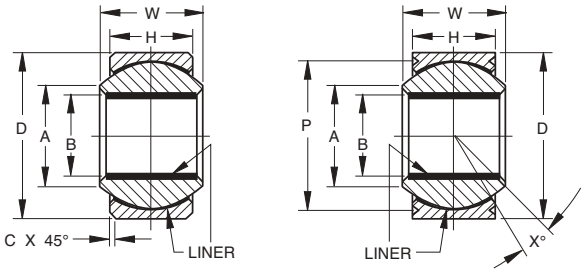

Chamfered Grooved

SPECIFICATIONS AND ORDERING INFORMATION

DIMENSIONS — TOLERANCES

03-833 NEE MS81820/4 Chamfered Type 03-835 NEEG MS81820/1 Grooved Type	B Ref.		D		H		W		A Min.		C(1)		P(2) Groove Pitch Diameter		X° Ref.
	+.0000, -.0010 +.000, -.025		+.0000, -.0005 +.000, -.013		±.005 ±.13		+.000, -.002 +.00, -.05				+.010, -.000 +.25, -.00		+.000 in., -.008 in. +.00 mm, -.20mm		
	in.	mm	in.	mm	in.	mm	in.	mm	in.	mm	in.	mm	in.	mm	
-04	.2510	6.375	.6562	16.667	.250	6.35	.343	8.71	.364	9.25	.010	.25	.594	15.09	10
-05	.3135	7.963	.7500	19.050	.281	7.14	.375	9.52	.419	10.64	.010	.25	.660	16.76	10
-06	.3760	9.550	.8125	20.638	.312	7.92	.406	10.31	.475	12.06	.020	.51	.712	18.08	9
-07	.4385	11.138	.9062	23.017	.343	8.71	.437	11.10	.530	13.46	.020	.51	.806	20.47	8
-08	.5010	12.725	1.0000	25.400	.390	9.91	.500	12.70	.600	15.24	.020	.51	.876	22.25	8
-09	.5635	14.313	1.0937	27.780	.437	11.10	.562	14.27	.670	17.02	.020	.51	.970	24.64	8
-10	.6260	15.900	1.1875	30.162	.500	12.70	.625	15.88	.739	18.77	.020	.51	1.063	27.00	8
-12	.7510	19.075	1.4375	36.512	.593	15.06	.750	19.05	.920	23.37	.030	.76	1.313	33.35	8
-14	.8760	22.250	1.5625	39.688	.703	17.86	.875	22.22	.980	24.89	.030	.76	1.438	36.53	8
-16	1.0010	25.425	1.7500	44.450	.797	20.24	1.000	25.40	1.118	28.40	.030	.76	1.626	41.30	9

(1)Chamfered Type only. (2)Grooved Type only. See page 17 for groove dimensions.

LOAD RATINGS

03-833 NEE MS81820/4 Chamfered Type 03-835 NEEG MS81820/1 Grooved Type	Oscillating Radial Load Rating(1)		Radial Limit Load Rating(1)		Axial Limit Load Rating(1)		No Load Rotational Breakaway Torque Inch-Pounds Standard		"K" Type		Weight Max.	
	lbf.	N	lbf.	N	lbf.	N	in.-lbs.	N-m	in.-lbs.	N-m	lbs.	kg
-04	2650	11800	5550	25000	430	1900	1-5	.11-.57	0-0.5	0-.06	0.02	0.009
-05	3700	16500	7700	34500	700	3100	1-15	.11-1.7	0-1	0-.11	0.03	0.014
-06	4900	21800	10200	45500	1100	4900	1-15	.11-1.7	0-1	0-.11	0.04	0.018
-07	6700	30000	12950	58000	1400	6200	1-15	.11-1.7	0-1	0-.11	0.05	0.023
-08	8250	37000	17250	77000	2100	9300	1-15	.11-1.7	0-1	0-.11	0.07	0.032
-09	10600	47200	22150	99000	3680	16300	1-15	.11-1.7	0-1	0-.11	0.09	0.041
-10	13250	59000	27700	123500	4720	20800	1-15	.11-1.7	0-1	0-.11	0.12	0.054
-12	19400	86300	40600	181000	6750	30000	1-15	.11-1.7	0-1	0-.11	0.21	0.095
-14	26750	119000	55950	250000	9350	41500	1-25	.11-2.8	0-2	0-.23	0.27	0.122
-16	35250	157000	73800	329000	12160	54000	1-25	.11-2.8	0-2	0-.23	0.39	0.176

(1)Load ratings based on AS81820.

Bearing configuration	Part number designations for a 0.2500 in. bore, grooved spherical bearing		
Base P/N (no options)	03-835-04	NEEG4	M81820/1-4
Low breakaway torque	03-835-04K	NEEG4K	M81820/1-4K
Cadmium plating	03-835-04P	NEEG4C	M81820/1-4P
1st oversize O.D. (0.010 in.)	03-835-04T	NEEG4Q	M81820/1-4T
2nd oversize O.D. (0.020 in.)	03-835-04U	NEEG4U	M81820/1-4U
Zinc Nickel plating	03-835-04Z	NEEG4Z	M81820/1-4Z

©2008, 2011, 2016 RBC Bearings Incorporated. All rights reserved.

M81820/2 & M81820/3 SELF-LUBRICATED SPHERICAL BEARING, LINED BORE, WIDE

- **AS81820/2 & AS81820/3 • AS81820 (formerly MIL-B-81820)**
- Wide series, self-lubricated, lined bore
- High temperature — low wear
  -65°F to +325°F (-53.9°C to +162.8°C)
- Material
  Outer ring: CRES 17-4PH, AMS 5643, HRC 28 min.
  Inner ring: CRES PH13-8Mo, AMS 5629, HRC 43 min.
  Liner: Fibriloid® or "E" Uniflon® qualified to AS81820

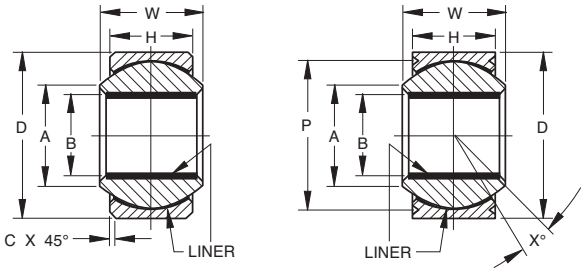

Chamfered Grooved

SPECIFICATIONS AND ORDERING INFORMATION

DIMENSIONS — TOLERANCES

03-834 WEE M81820/2 Chamfered Type 03-836 WEEG M81820/3 Grooved Type	B Ref. +.0000, -.0010 +.000, -.025		D +.0000, -.0005 -.000, -.013		H ±.005 ±.13		W +.000, -.002 +.00, -.05		A Min.		C(1) +.010, -.000 +.25, -.00		P(2) Groove Pitch Diameter +.000 in., -.008 in. +.00 mm, -.20mm		X° Ref.
	in.	mm	in.	mm	in.	mm	in.	mm	in.	mm	in.	mm	in.	mm	
-05	.3135	7.963	.6875	17.462	.317	8.05	.437	11.10	.360	9.14	.015	0.38	.625	15.88	14
-06	.3760	9.550	.8125	20.638	.406	10.31	.500	12.70	.466	11.84	.020	0.51	.712	18.08	8
-07	.4385	11.138	.9375	23.813	.442	11.23	.562	14.27	.537	13.64	.020	0.51	.837	21.26	10
-07A(2)	.4385	11.138	.9062	23.017	.442	11.23	.562	14.27	.537	13.64	.020	0.51	.806	20.47	10
-08	.5010	12.725	1.0000	25.400	.505	12.83	.625	15.88	.607	15.42	.020	0.51	.900	22.86	9
-09	.5635	14.313	1.1250	28.575	.536	13.61	.687	17.45	.721	18.31	.020	0.51	1.025	26.04	10
-10	.6260	15.900	1.1875	30.162	.567	14.40	.750	19.05	.747	18.97	.020	0.51	1.087	27.61	12
-12	.7510	19.075	1.3750	34.925	.630	16.00	.875	22.22	.845	21.46	.030	0.76	1.251	31.78	13
-14	.8760	22.250	1.6250	41.275	.755	19.18	.875	22.22	.995	25.27	.030	0.76	1.501	38.13	6
-16	1.0010	25.425	2.1250	53.975	1.005	25.53	1.375	34.92	1.269	32.33	.030	0.76	2.001	50.83	12

(1)Chamfered Type only. (2)Grooved Type only. See page 17 for groove dimensions.

LOAD RATINGS

03-834 WEE M81820/2 Chamfered Type 03-836 WEEG M81820/3 Grooved Type	Oscillating Radial Load Rating(1)		Radial Limit Load Rating(1)		Axial Limit Load Rating(1)		No Load Rotational Breakaway Torque Standard		"K" Type		Weight Max.	
	lbf.	N	lbf.	N	lbf.	N	in.-lbs.	N-m	in.-lbs.	N-m	lbs.	kg
-05	4450	19800	9300	41400	1640	7350	1-15	.11-1.7	0-1	0-.11	0.035	0.016
-06	6200	27600	13000	58000	2630	11600	1-15	.11-1.7	0-1	0-.11	0.060	0.027
-07	8250	36700	17300	77000	3650	16300	1-15	.11-1.7	0-1	0-.11	0.080	0.036
-07A(2)	8250	36700	17300	77000	3650	16300	1-15	.11-1.7	0-1	0-.11	0.080	0.036
-08	10600	47200	21400	95200	4970	22000	1-15	.11-1.7	0-1	0-.11	0.100	0.045
-09	13200	59000	26600	118300	5370	24000	1-15	.11-1.7	0-1	0-.11	0.135	0.061
-10	16150	72000	29000	129000	6130	27500	1-15	.11-1.7	0-1	0-.11	0.160	0.072
-12	24800	111000	37000	165000	7730	34500	1-15	.11-1.7	0-1	0-.11	0.240	0.108
-14	26750	119000	56000	249100	10800	48000	1-25	.11-2.8	0-2	0-.23	0.350	0.158
-16	49300	220000	103000	458200	19300	86500	1-25	.11-2.8	0-2	0-.23	0.970	0.437

(1)Load ratings based on AS81820. (2)Grooved Type only.

©2008, 2011, 2016 RBC Bearings Incorporated. All rights reserved.

SEALED SELF-LUBRICATED SPHERICAL BEARING, NARROW

- Narrow series, self-lubricated
- High temperature — low wear
  -65°F to +325°F (-53.9°C to +162.8°C)
- Material
  Outer ring: CRES 17-4PH, AMS 5643, HRC 28 min.
  Inner ring: CRES 440C, AMS 5630, HRC 55 min.
  Liner: "E" Uniflon® qualified to AS81820
  Seal: Silicon rubber seal retained by stainless steel shield

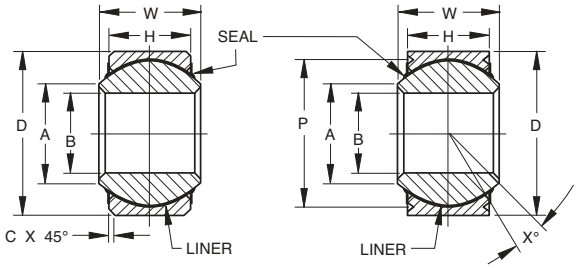

Chamfered Grooved

SPECIFICATIONS AND ORDERING INFORMATION

DIMENSIONS — TOLERANCES

NESxxB NEGSxxB Dash No.	B +.0000, -.0005 +.000, -.013		D +.0000, -.0005 +.000, -.013		H ±.005 ±.13		W +.000, -.002 +.00, -.05		A Min.		C(1) +.010, -.000 +.25, -.00		P(2) Groove Pitch Diameter +.000 in., -.008 in. +.00 mm, -.20mm		X° Ref.
Chamfered/Grooved Part Numbers	in.	mm	in.	mm	in.	mm	in.	mm	in.	mm	in.	mm	in.	mm	
03	.1900	4.826	.5625	14.288	.218	5.54	.281	7.14	.293	7.44	.010	.25	.500	12.70	10
04	.2500	6.350	.6562	16.667	.250	6.35	.343	8.71	.364	9.25	.010	.25	.594	15.09	10
05(1)	.3125	7.938	.7500	19.050	.281	7.14	.375	9.52	.419	10.64	.010	.25	.660	16.76	10
05A(2)	.3125	7.938	.7500	19.050	.281	7.14	.375	9.52	.419	10.64	.010	.25	.660	16.76	10
06	.3750	9.525	.8125	20.638	.312	7.92	.406	10.31	.475	12.06	.020	.51	.712	18.08	9
07	.4375	11.112	.9062	23.017	.343	8.71	.437	11.10	.530	13.46	.020	.51	.806	20.47	8
08	.5000	12.700	1.0000	25.400	.390	9.91	.500	12.70	.600	15.24	.020	.51	.876	22.25	8
09	.5625	14.288	1.0937	27.780	.437	11.10	.562	14.27	.670	17.02	.020	.51	.970	24.64	8
10	.6250	15.875	1.1875	30.162	.500	12.70	.625	15.88	.739	18.77	.020	.51	1.063	27.00	8
12	.7500	19.050	1.4375	36.512	.593	15.06	.750	19.05	.920	23.37	.030	.76	1.313	33.35	8
14	.8750	22.225	1.5625	39.688	.703	17.86	.875	22.22	.980	24.89	.030	.76	1.438	36.53	8
16	1.0000	25.400	1.7500	44.450	.797	20.24	1.000	25.40	1.118	28.40	.030	.76	1.626	41.30	9

(1)Chamfered Type only. (2)Grooved Type only. See page 17 for groove dimensions.

LOAD RATINGS

NESxxB NEGSxxB Dash No.	Oscillating Radial Load Rating(3)		Radial Limit Load Rating(3)		Axial Limit Load Rating(3)		No Load Rotational Breakaway Torque Standard		"K" Type		Weight Max. Ref.	
Chamfered/Grooved Part Numbers	lbf.	N	lbf.	N	lbf.	N	in.-lbs.	N-m	in.-lbs.	N-m	lbs.	kg
03	1500	6700	3975	17600	150	670	.25-5	.03-.56	0-0.5	0-.06	.02	.010
04	3320	14600	6040	27000	430	1900	.25-5	.03-.56	0-0.5	0-.06	.02	.010
05(1)	5460	24500	8750	39000	700	3100	.25-8	.03-.90	0-1	0-.11	.03	.015
05A(2)	5460	24500	8750	39000	700	3100	.25-8	.03-.90	0-1	0-.11	.03	.015
06	6600	29000	10540	46500	1100	4900	.25-8	.03-.90	0-1	0-.11	.04	.017
07	8050	36000	13200	58500	1400	6200	.25-8	.03-.90	0-1	0-.11	.05	.023
08	10400	46500	17900	80000	2100	9300	.25-8	.03-.90	0-1	0-.11	.07	.032
09	13000	58500	23200	104000	3680	16300	.25-8	.03-.90	0-1	0-.11	.09	.041
10	16450	73500	30500	137000	4720	20800	.25-8	.03-.90	0-1	0-.11	.12	.056
12	23600	104000	46400	208000	6750	30000	.25-8	.03-.90	0-1	0-.11	.21	.095
14	30250	134000	62200	275000	9350	41500	.25-12	.03-1.4	0-2	0-.23	.27	.122
16	38000	170000	82200	365000	12160	54000	.25-12	.03-1.4	0-2	0-.23	.39	.175

(1)Chamfered Type only. (2)Grooved Type only.

(3)Load ratings based on AS81820. -3 and -4 sizes are limited by pin bending.

Bearing configuration	Part number designations for a 0.2500 in. bore, grooved spherical bearing
Base P/N (no options)	NEGS04B
Low breakaway torque	NEGS04BK
Cadmium plating	NEGS04BC
Zinc Nickel plating	NEGS04BIOGZ

©2008, 2011, 2016 RBC Bearings Incorporated. All rights reserved.

SEALED SELF-LUBRICATED SPHERICAL BEARING, WIDE

- Wide series, self-lubricated
- High temperature — low wear
  -65°F to +325°F (-53.9°C to +162.8°C)
- Material
  Outer ring: CRES 17-4PH, AMS 5643, HRC 28 min.
  Inner ring: CRES 440C, AMS 5630, HRC 55 min.
  Liner: "E" Uniflon® qualified to AS81820
  Seal: Silicon rubber seal retained by stainless steel shield

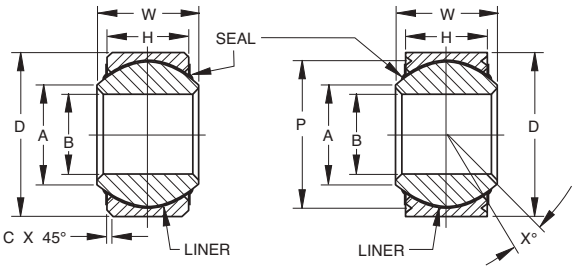

SPECIFICATIONS AND ORDERING INFORMATION

DIMENSIONS — TOLERANCES

WESxxW WEGSxxW Dash No.	B +.0000, -.0005 +.000, -.013		D +.0000, -.0005 +.000, -.013		H ±.005 ±.13		W +.000, -.002 +.00, -.05		A Min.		C(1) +.010, -.000 +.25, -.00		P(2) Groove Pitch Diameter +.000 in., -.008 in. +.00 mm, -.20mm		X° Ref.
Chamfered/Grooved Part Numbers	in.	mm	in.	mm	in.	mm	in.	mm	in.	mm	in.	mm	in.	mm	
03	.1900	4.826	.6250	15.875	.327	8.31	.437	11.10	.300	7.62	.010	0.25	.563	14.30	15
04	.2500	6.350	.6250	15.875	.327	8.31	.437	11.10	.300	7.62	.010	0.25	.563	14.30	15
05	.3125	7.938	.6875	17.462	.317	8.05	.437	11.10	.360	9.14	.010	0.25	.625	15.88	14
06	.3750	9.525	.8125	20.638	.406	10.31	.500	12.70	.466	11.84	.020	0.51	.712	18.08	8
07A(2)	.4375	11.112	.9062	23.017	.442	11.23	.562	14.27	.537	13.64	.020	0.51	.806	20.47	10
07	.4375	11.112	.9375	23.812	.442	11.23	.562	14.27	.537	13.64	.020	0.51	.837	21.26	10
08	.5000	12.700	1.0000	25.400	.505	12.83	.625	15.88	.607	15.42	.020	0.51	.900	22.86	9
09	.5625	14.288	1.1250	28.575	.536	13.61	.687	17.45	.721	18.31	.020	0.51	1.025	26.04	10
10	.6250	15.875	1.1875	30.162	.567	14.40	.750	19.05	.747	18.97	.020	0.51	1.087	27.61	12
12	.7500	19.050	1.3750	34.925	.630	16.00	.875	22.22	.845	21.46	.030	0.76	1.251	31.78	13
14	.8750	22.225	1.6250	41.275	.755	19.18	.875	22.22	.995	25.27	.030	0.76	1.501	38.13	6
16	1.0000	25.400	2.1250	53.975	1.005	25.53	1.375	34.92	1.269	32.23	.030	0.76	2.001	50.83	12

(1)Chamfered Type only. (2)Grooved Type only. See page 17 for groove dimensions.

LOAD RATINGS

WESxxW WEGSxxW Dash No.	Oscillating Radial Load Rating(3)		Radial Limit Load Rating(3)		Axial Limit Load Rating(3)		No Load Rotational Breakaway Torque Standard		"K" Type		Weight Max. Ref.	
Chamfered/Grooved Part Numbers	lbf.	N	lbf.	N	lbf.	N	in.-lbs.	N-m	in.-lbs.	N-m	lbs.	kg
03	4900	21600	2500	11100	1770	7800	.25-5	.03-.56	0.05	0-.06	.031	.014
04	4900	21600	5500	24400	1770	7800	.25-5	.03-.56	0.05	0-.06	.031	.014
05	6050	27000	9400	41800	1640	7350	.25-8	.03-.90	0.10	0-.11	.035	.016
06	8310	36500	13700	60900	2630	11600	.25-8	.03-.90	0.10	0-.11	.060	.027
07A(2)	11750	52000	19700	87600	3650	16300	.25-8	.03-.90	0.10	0-.11	.080	.036
07	11750	52000	20700	92000	3650	16300	.25-8	.03-.90	0.10	0-.11	.080	.036
08	14950	65500	21400	95000	4970	22000	.25-8	.03-.90	0.10	0-.11	.100	.045
09	18100	80000	26600	118000	5370	24000	.25-8	.03-.90	0.10	0-.11	.135	.061
10	20250	90000	29000	128500	6130	27500	.25-8	.03-.90	0.10	0-.11	.160	.072
12	26200	116000	37000	164500	7730	34500	.25-8	.03-.90	0.10	0-.11	.240	.110
14	33600	150000	65200	290000	10800	48000	.25-12	.03-1.4	0.20	0-.23	.350	.160
16	56250	250000	104000	462500	19300	86500	.25-12	.03-1.4	0.20	0-.23	.970	.440

(1)Chamfered Type only. (2)Grooved Type only.

(3)Load ratings based on AS81820. -3 and -4 sizes are limited by pin bending.

Bearing configuration	Part number designations for a 0.2500 in. bore, grooved spherical bearing
Base P/N (no options)	WEGS04W
Low breakaway torque	WEGS04WK
Cadmium plating	WEGS04WC
Zinc Nickel plating	WEGS04WZ

©2008, 2011, 2016 RBC Bearings Incorporated. All rights reserved.

EN2022

European Standards

- Light series, self-lubricated
- All dimensions are metric
- Material
  Outer ring: CRES 17-4PH, EN2136 or EN2539
  Inner ring: CRES 440C, EN2030
  Liner: Fibriloid® or "E" Uniflon® qualified to AS81820
  (qualification to EN2064 pending)

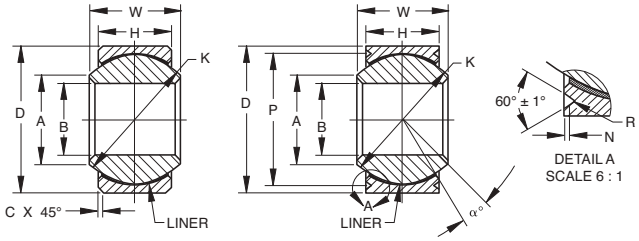

Chamfered EN2022S

Grooved EN2022R

SPECIFICATIONS AND ORDERING INFORMATION

	Ball					Outer race			Chamfer		V-groove			Loads			Movement		
Dash No	ø B Bore		ø A	W Width	ø K	ø D O. diam.		H Width	C		ø P	N	R	Radial Cs	Axial Ca	Oscillating Load	Angle α°	No-load rotational breakaway torque	Weight
		Tol. (µm)	Mini	+ 0.00 - 0.06			Tol. (µm)	+ 0.1 - 0.1			+ 0.1 - 0.0	+ 0.0 - 0.2	+ 0.1 - 0.0		(kN)			(Nm)	(g)
12	12	0 -8	14.3	10	17.5	22	0 -9	7	0.8	+0,4 -0,3	20.2	0.7	0.2	40.5	1.5	16.2	11	0.12 to 0.80	17
15	15		18.7	12	22.2	26		9			24.2			66.9	5.1	26.7	9		32
17	17		21.2	14	25.4	30		10			28.2			87.4	7.1	34.9	10		49
20	20	0 -10	24.9	16	29.6	35	0 -11	12	1	+0,5 -0,4	33.2			127.3	13.7	50.9	9		65
25	25		30.0	20	36.0	42		16			39.4	0.9	0.3	216.7	28.6	86.7	7	0.25 to 1.00	115
30	30		34.3	22	40.7	47		18			44.4			262.5	38.0	105.0	6	0.40 to 2.00	160
35	35	0 -12	40.5	25	47.6	55	0 -13	20	1.2	+0,5 -0,4	51.8	1.4		348.1	49.0	139.0	7		229
40	40		45.0	28	53.0	62		22			58.8			410.2	61.2	164.1	7	0.60 to 3.50	315
45	45		51.3	32	60.4	68		25			64.8			545.5	81.9	218.2	7		460
50	50		58.2	35	67.9	75		28			71.8			695.7	105.6	278.3	7		560

Bearing configuration	Part number designations for a 12mm bore, wide series, spherical bearing	
Chamfered outer ring	EN2022S12	RBC part number 03-872-12 (Fibriloid® liner)
Grooved outer ring	EN2022R12	RBC part number 03-871-12 (Fibriloid® liner)

©2008, 2011, 2016 RBC Bearings Incorporated. All rights reserved.

EN2023

European Standards

- Normal load series, self-lubricated, wide and narrow
- All dimensions are metric
- Material
  Outer ring: CRES 17-4PH, EN2136 or EN2539
  Inner ring: CRES 440C, EN2030
  Liner: Fibriloid® or "E" Uniflon® qualified to AS81820
  (qualification to EN2064 pending)

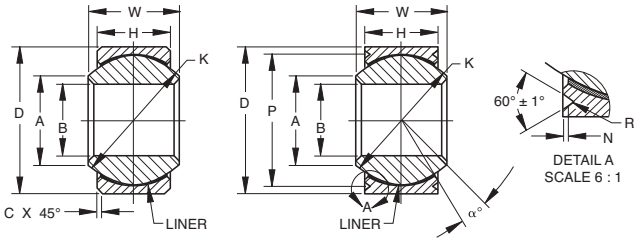

Chamfered EN2023S

Grooved EN2023R

SPECIFICATIONS AND ORDERING INFORMATION

		Ball					Outer race			Chamfer		V-groove			Loads			Movement		
	Dash No	ø B Bore		ø A	W Width	ø K	ø D O. diam.		H Width	C		ø P	N	R	Radial Cs	Axial Ca	Oscillating Load	Angle α°	No-load rotational breakaway torque	Weight
		Tol. (µm)		mini	+ 0.00 - 0.06		Tol. (µm)		+ 0.1 - 0.1	Tol. (mm)		+ 0.1 - 0.0	+ 0.0 - 0.2	+ 0.1 - 0.0	(kN)				(Nm)	(g)
Wide series	06L	6	+0 -8	7.7	11.0	13.5	16	+0 -8	8.5	0.8	+0.0 -0.3	14.2	0.7	0.2	40	6.1	16.0	15	0.08 to 0.50	16
	08L	8		10.3	11.0	15.0	18		8.0			16.2			41	5.1	17.0	14	0.12 to 0.80	17
	10L	10		12.2	12.5	17.5	21	+0 -9	10.0			18.4	0.9	0.3	63	9.5	25.0	10		27
	12L	12		15.5	16.0	22.2	26		13.0			23.4			105	18.6	42.0	10		49
	15L	15		18.9	17.0	25.4	29		13.5			26.4			126	20.4	50.0	9		62
	17L	17		20.1	18.0	27.0	30		14.5			27.4			145	24.3	58.0	9		69
	20L	20	+0 -10	23.5	20.0	30.9	35	+0 -11	16.0			31.8	1.4		191	30.7	76.0	8		104
	25L	25		35.3	32.0	47.6	54	+0 -13	26.0	1.0	+0.0 -0.4	50.8			491	93.2	197.0	9	0.25 to 1.00	445
	30L	30		40.9	34.0	53.2	60		28.0	1.2		56.8			548	109.7	220.0	8	0.40 to 2.00	480
Narrow series	05E	5	+0 -8	8.6	7.0	11.1	14	+0 -8	5.5	0.5	+0.1 -0.2	12.2	0.7	0.2	18	1.5	7.4	9	0.08 to 0.50	7
	06E	6		9.0	9.0	13.5	16		6.5			14.2			27	2.7	11.0	14		9
	10E	10		11.9	10.5	15.9	21	+0 -9	8.0	0.8	+0.0 -0.3	18.4	0.9	0.3	44	5.1	17.0	11	0.12 to 0.80	20
	12E	12		15.0	13.0	19.8	25		10.0			22.4			68	9.5	27.0	10		32
	22E	22	+0 -10	27.1	22.0	34.9	40	+0 -11	18.0	1.0	+0.0 -0.4	36.8	1.4		240	40.5	96.0	8	0.25 to 1.00	126
	25E	25		29.6	25.0	38.8	45		20.0			41.8			307	51.7	123.0	8		185
	30E	30		35.5	28.0	45.2	51	+0 -13	24.0			47.8			389	78.0	156.0	6	0.40 to 2.00	300

Bearing configuration	Part number designations for a 12mm bore, spherical bearing	
Chamfered outer ring, wide series	EN2023S12L	RBC part number 03-875-12
Grooved outer ring, wide series	EN2023R12L	RBC part number 03-873-12
Chamfered outer ring, narrow series	EN2023S12E	RBC part number 03-876-12 (Fibriloid® liner)
Grooved outer ring, narrow series	EN2023R12E	RBC part number 03-874-12 (Fibriloid® liner)

©2008, 2011, 2016 RBC Bearings Incorporated. All rights reserved.

EN4613 SELF-LUBRICATED SPHERICAL BEARING, NARROW

- Narrow series, self-lubricated
- High temperature — low wear
  -67°F to +325°F (-55°C to +163°C)
  Liner capable to 450°F (232°C)
- Material
  Outer ring: CRES 17-4PH, AMS 5643
  Inner ring: CRES 440C, AMS 5630
  Liner: Composite liner qualified to AS81820, EN2755 pending

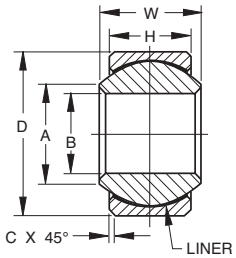

Chamfered

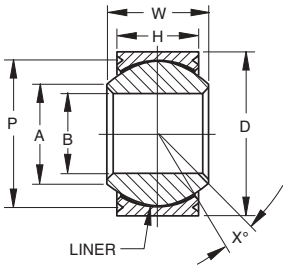

Grooved

SPECIFICATIONS AND ORDERING INFORMATION

DIMENSIONS — TOLERANCES

03-861 Chamfered 03-863 Grooved Dash No.	NE NEG Dash No.	EN4613S Chamfered EN4613R Grooved Dash No.	B +.000, -.0005 +0.00, -.013		D +.000, -.0005 +0.00, -.013		H ±.005 ±.13		W +.000, -.002 +.000, -.050		A Ref.		C[1] +0.01, -0.00 +.25, -.00		P[2] Groove Pitch Diameter +.00 in., -.010 in. +.00 mm, -.25mm		X° Min.
Chamfered/Grooved Part Numbers			in.	mm	in.	mm	in.	mm	in.	mm	in.	mm	in.	mm	in.	mm	
-03	3	-3	.1900	4.826	.5625	14.288	.218	5.54	.281	7.14	.336	8.53	0.0200	0.508	.500	12.70	10
-04	4	-4	.2500	6.350	.6562	16.667	.250	6.35	.343	8.71	.364	9.25	0.0200	0.508	.594	15.09	10
-05[1]	5[1]	-5[1]	.3125	7.938	.7500	19.050	.281	7.14	.375	9.52	.461	11.71	0.0200	0.508	.660	16.76	10
-06	6	-6	.3750	9.525	.8125	20.638	.312	7.92	.406	10.31	.475	12.06	0.0300	0.762	.712	18.08	9
-07	7	-7	.4375	11.112	.9062	23.017	.343	8.71	.437	11.10	.530	13.46	0.0300	0.762	.806	20.47	8
-08	8	-8	.5000	12.700	1.0000	25.400	.390	9.91	.500	12.70	.600	15.24	0.0300	0.762	.876	22.25	8
-09	9	-9	.5625	14.288	1.0937	27.780	.437	11.10	.562	14.27	.670	17.02	0.0300	0.762	.970	24.64	8
-10	10	-10	.6250	15.875	1.1875	30.162	.500	12.70	.625	15.88	.739	18.77	0.0300	0.762	1.063	27.00	8
-12	12	-12	.7500	19.050	1.4375	36.512	.593	15.06	.750	19.05	1.000	25.40	0.0400	1.016	1.313	33.35	8
-14	14	-14	.8750	22.225	1.5625	39.688	.703	17.86	.875	22.22	.980	24.89	0.0400	1.016	1.438	36.53	8
-16	16	-16	1.0000	25.400	1.7500	44.450	.797	20.24	1.000	25.40	1.118	28.40	0.0400	1.016	1.626	41.30	9
-20	20	-20	1.2500	31.750	2.0000	50.800	.942	23.93	1.093	27.76	1.434	36.42	0.0400	1.016	1.626	47.65	5.5
-24	24	-24	1.5000	38.100	2.4370	61.912	1.130	28.70	1.312	33.33	1.828	46.43	0.0400	1.016	1.626	58.75	5
-28	28	-28	1.7500	44.450	2.8120	71.437	1.317	33.45	1.531	38.89	1.997	50.71	0.0400	1.016	1.626	68.27	5.5
-32	32	-32	2.0000	50.800	3.1875	80.962	1.560	38.23	1.750	44.45	2.530	61.98	0.0400	1.016	1.626	77.83	5

[1]Chamfered Type only. [2]Grooved Type only. See page 17 for groove dimensions.

LOAD RATINGS

03-861 Chamfered 03-863 Grooved Dash No.	Permissible Static Load Radial b Cs		Permissible Static Load Axial ac Ca		Ultimate Static Load Radial		Ultimate Static Load Axial		Dynamic Load Radial		Starting Torque Normal Code N		Starting Torque Reduced Code R	
	lbs.	KN	lbs.	KN	lbs.	KN	lbs.	KN	lbs.	KN	lbs.-in.	NM	lbs.-in.	NM
3	3754.3	16.7	539.5	2.4	5620.3	25.0	809.3	3.6	2315.5	10.3	0.53 - 3.01	0.06 - 0.34	0 - 0.97	0 - 0.11
4	6879.2	30.6	764.4	3.4	10318.8	45.9	1146.5	5.1	3372.2	15.0	0.97 - 4.96	0.11 - 0.56	0 - 0.97	0 - 0.11
5[1]	8880.0	39.5	989.2	4.4	13308.8	59.2	1506.2	6.7	4338.8	19.3	0.97 - 4.96	0.11 - 0.56	0 - 0.97	0 - 0.11
6	11128.1	49.5	1281.4	5.7	16680.9	74.2	1910.9	8.5	5440.4	24.2	0.97 - 4.96	0.11 - 0.56	0 - 0.97	0 - 0.11
7	13601.0	60.5	1573.7	7.0	20412.7	90.8	2360.5	10.5	6654.4	29.6	0.97 - 4.96	0.11 - 0.56	0.27 - 1.33	0.03 - 0.15
8	17872.4	79.5	2113.2	9.4	26819.8	119.3	3147.3	14.0	8745.1	38.9	0.97 - 4.96	0.11 - 0.56	0.27 - 1.33	0.03 - 0.15
9	20367.8	90.6	3259.7	14.5	30551.7	135.9	4900.9	21.8	9959. I	44.3	0.97 - 4.96	0.11 - 0.56	0.27 - 1.33	0.03 - 0.15
10	26505.1	117.9	4518.7	20.1	39768.9	176.9	6766.8	30.1	12971.5	57.7	0.97 - 4.96	0.11 - 0.56	0.27 - 1.33	0.03 - 0.15
12	38982.1	173.4	6497.0	28.9	58473.1	260.1	9734.3	43.3	19063.9	84.8	0.97 - 4.96	0.11 - 0.56	0.27 - 1.33	0.03 - 0.15
14	52583.1	233.9	9644.3	42.9	78908.3	351.0	14455.3	64.3	25718.3	114.4	2.04 - 7.97	0.23 - 0.90	0.35 - 2.21	0.04 - 0.25
16	69219.0	307.9	12814.2	57.0	103839.7	461.9	19221.3	85.5	33833.9	150.5	2.04 - 7.97	0.23 - 0.90	0.35 - 2.21	0.04 - 0.25
20	100287.7	446.1	18614.3	82.8	150442.9	669.2	27921.4	124.2	49031.1	218.1	2.04 - 13.28	0.23 - 1.50	0.44 - 2.83	0.05 - 0.32
24	152758.4	679.5	27741.6	123.4	229148.8	1019.3	41589.9	185.0	74681.9	332.2	2.04 - 13.28	0.23 - 1.50	0.44 - 2.83	0.05 - 0.32
28	201519.7	896.4	38599.9	171.7	302279.5	1344.6	57888.6	257.5	98511.7	438.2	2.04 - 13.28	0.23 - 1.50	0.44 - 2.83	0.05 - 0.32
32	277393.1	1233.9	51346.1	228.4	416078.3	1850.8	77019.9	342.6	135605.4	603.2	2.04 - 13.28	0.23 - 1.50	0.44 - 2.83	0.05 - 0.32

[1]Chamfered Type only. [2]Grooved Type only.

[3]Load ratings based on AS81820. -3 and -4 sizes are limited by pin bending.

©2008, 2011, 2016 RBC Bearings Incorporated. All rights reserved.

RBC AEROSPACE BEARINGS

EN4614 SELF-LUBRICATED SPHERICAL BEARING, WIDE

- Wide series, self-lubricated
- High temperature — low wear
  -67°F to +325°F (-55°C to +163°C)
  Liner capable to 450°F (232°C)
- Material
  Outer ring: CRES 17-4PH, AMS 5643
  Inner ring: CRES 440C, AMS 5630
  Liner: Composite liner qualified to AS81820, EN2755 pending

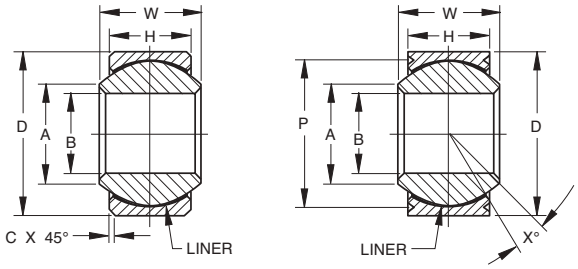

Chamfered Grooved

SPECIFICATIONS AND ORDERING INFORMATION

DIMENSIONS — TOLERANCES

03-862 Chamfered 03-864 Grooved Dash No.	NE NEG Dash No.	EN4614S Chamfered EN4614R Grooved Dash No.	B		D		H		W		A		C[1]		P[2] Groove Pitch Diameter		X°
			+.000, -.0005 +0.00, -.013		+.000, -.0005 +0.00, -.013		±.005 ±.13		+.000, -.002 +.000, -.050		Ref.		+0.01, -0.00 +.25, -.00		+.00 in., -.010 in. +.00 mm, -.25mm		Min.
Chamfered/Grooved Part Numbers			in.	mm	in.	mm	in.	mm	in.	mm	in.	mm	in.	mm	in.	mm	
-03	3	-3	.1900	4.826	.6250	15.875	.327	8.31	.437	11.10	.300	7.62	0.0200	0.508	.563	14.30	15
-04	4	-4	.2500	6.350	.6250	15.875	.327	8.31	.437	11.10	.300	7.62	0.0200	0.508	.563	14.30	15
-05	5	-5	.3125	7.938	.6875	17.452	.317	8.05	.437	11.10	.360	9.14	0.0200	0.508	.625	15.87	14
-06	6	-6	.3750	9.525	.8125	20.638	.405	10.31	.500	12.70	.466	11.84	0.0300	0.762	.712	18.08	8
-07	7	-7	.4375	11.112	.9375	23.812	.442	11.23	.582	14.28	.537	13.64	0.0300	0.762	.837	21.26	10
-07A	7A	-7A	.4375	11.112	.9062	23.017	.442	11.23	.582	14.28	.537	13.64	-	-	.808	20.52	10
-08	8	-8	.5000	12.700	1.0000	25.400	.505	12.83	.625	15.88	.607	15.42	0.0300	0.762	.900	22.86	9
-09	9	-9	.5625	14.288	1.1250	28.575	.536	13.61	.687	17.45	.721	18.31	0.0300	0.762	1.025	26.03	10
-10	10	-10	.6250	15.875	1.1875	30.162	.567	14.40	.750	19.05	.747	18.97	0.0300	0.762	1.087	27.60	12
-12	12	-12	.7500	19.050	1.3750	34.925	.630	16.00	.875	22.22	.845	21.46	0.0400	1.016	1.251	31.78	13
-14	14	-14	.8750	22.225	1.6250	41.275	.755	19.18	.875	22.22	.995	25.27	0.0400	1.016	1.501	38.12	6
-16	16	-16	1.0000	25.400	2.1250	53.975	1.005	25.53	1.375	34.93	1.269	32.23	0.0400	1.016	2.001	50.82	12
-20	20	-20	1.2500	31.750	2.3750	60.325	1.130	28.70	1.500	38.10	1.483	37.15	0.0400	1.016	2.251	57.17	12
-24	24	-24	1.5000	38.100	2.6875	68.262	1.223	31.08	1.687	42.85	1.791	45.50	0.0400	1.016	2.562	65.08	13
-28	28	-28	1.7500	44.450	3.0000	76.200	1.317	33.45	1.812	46.02	1.965	49.90	0.0400	1.016	2.876	73.05	12
-32	32	-32	2.0000	50.800	3.2500	82.550	1.380	35.05	1.937	49.19	2.209	56.10	0.0400	1.016	3.124	79.35	12

[1]Chamfered Type only. [2]Grooved Type only. See page 17 for groove dimensions.

LOAD RATINGS

03-862 Chamfered 03-864 Grooved Dash No.	Permissible Static Load				Ultimate Static Load				Dynamic Load Radial		Starting Torque			
	Radial b Cs		Axial ac Ca		Radial		Axial				Normal Code N		Reduced Code R	
	lbs.	KN	lbs.	KN	lbs.	KN	lbs.	KN	lbs.	KN	lbs.-in.	NM	lbs.-in.	NM
3	2405	10.7	1416	6.3	3619	16.1	2113	9.4	2405	10.7	0.50 - 5.0	0.06 - 0.56	0 - 0.97	0 - 0.11
4	5508	24.5	1416	6.3	8250	36.7	2113	9.4	4878	21.7	0.97 - 4.96	0.11 - 0.56	0 - 0.97	0 - 0.11
5	10251	45.6	1326	5.9	15377	68.4	1978	8.8	5013	22.3	0.97 - 4.96	0.11 - 0.56	0 - 0.97	0 - 0.11
6	16209	72.1	2293	10.2	24324	108.2	3440	15.3	8003	35.6	0.97 - 4.96	0.11 - 0.56	0 - 0.97	0 - 0.11
7 & 7A	20435	90.9	2765	12.3	30664	136.4	4159	18.5	9982	44.4	0.97 - 4.96	0.11 - 0.56	0.27 - 1.33	0.03 - 0.15
8	26482	117.8	3705	16.5	39746	176.8	5553	24.7	12949	57.6	0.97 - 4.96	0.11 - 0.56	0.27 - 1.33	0.03 - 0.15
9	29607	131.7	5328	23.7	44400	197.5	7981	35.5	14478	64.4	0.97 - 4.96	0.11 - 0.56	0.27 - 1.33	0.03 - 0.15
10	33609	149.5	6070	27.0	50425	224.3	9105	40.5	16435	73.1	0.97 - 4.96	0.11 - 0.56	0.27 - 1.33	0.03 - 0.15
12	42894	190.8	7486	33.3	64318	286.1	11218	49.9	20975	93.3	0.97 - 4.96	0.11 - 0.56	0.27 - 1.33	0.03 - 0.15
14	57551	256.0	11352	50.5	86304	383.9	17018	75.7	28124	125.1	2.04 - 7.97	0.23 - 0.90	0.35 - 2.21	0.04 - 0.25
16	111797	497.3	21469	95.5	167685	745.9	32215	143.3	54651	243.1	2.04 - 7.97	0.23 - 0.90	0.35 - 2.21	0.04 - 0.25
20	142237	632.7	27741	123.4	213344	949.0	41590	185.0	69533	309.3	2.04 - 13.28	0.23 - 1.50	0.44 - 2.83	0.05 - 0.32
24	181983	809.5	32912	146.4	272963	1214.2	49368	219.6	88957	395.7	2.04 - 13.28	0.23 - 1.50	0.44 - 2.83	0.05 - 0.32
28	214041	952.1	38600	171.7	321072	1428.2	57888	257.5	104649	465.5	2.04 - 13.28	0.23 - 1.50	0.44 - 2.83	0.05 - 0.32
32	247357	1100.3	42669	189.8	371025	1650.4	64003	284.7	120925	537.9	2.04 - 13.28	0.23 - 1.50	0.44 - 2.83	0.05 - 0.32

[1]Chamfered Type only. [2]Grooved Type only.

[3]Load ratings based on AS81820. -3 and -4 sizes are limited by pin bending.

©2008, 2011, 2016 RBC Bearings Incorporated. All rights reserved.

M81936/1( ) METAL-TO-METAL SPHERICAL BEARING

AS81936/1 • AS81936 (FORMERLY MIL-B-81936)

- Grooved, lubricated through ball and race
- Material
  Inner ring: Beryllium copper per ASTM B194, B196 HRC 37 min.
  Outer ring: CRES 17-4PH, AMS 5643, HRC 28 min.
- Prepacked with MIL-PRF-81322 grease

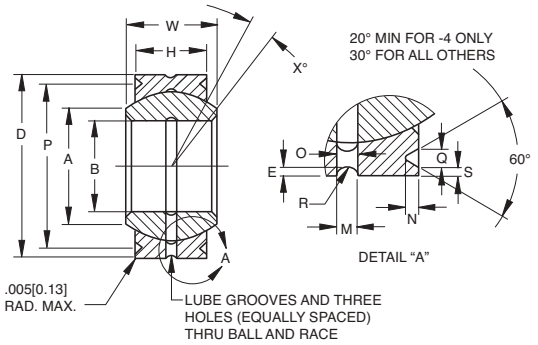

SPECIFICATIONS AND ORDERING INFORMATION

DIMENSIONS — TOLERANCES

Bearing Number	M 81936/1 Dash No.	B Bore Diameter +.0000 in. -.0005 in. +.000 mm -.013 mm	D Outside Diameter +.0000 in. -.0005 in. +.000 mm -.013 mm	W Widths +.000 in. -.005 in. +.00mm -.13mm	H Widths +.000 in. -.005 in. +.00mm -.13mm	A Min.	N +.000 in. -.015 in. +.00mm -.38mm	Q +.000 in. -.010 in. +.00mm -.25mm	S +.000 in. -.010 in. +.00mm -.25mm	P Pitch Dia.	E	R	O	X° Ref.	Radial Static Limit Load Rating	Axial Static Limit Load Rating	Weight Max.
		inch	inch	inch	inch	inch	inch	inch	inch	inch	inch	inch	inch		lbs.	lbs.	lbs.
		mm	mm	mm	mm	mm	mm	mm	mm	mm	mm	mm	mm		N	N	N
03-582-04	-4	0.25	0.6562	0.343	0.25	0.357	0.03	0.045	0.02	.596	.010/.015	.030/.057	.032/.062	12	6330	1930	0.03
		6.35	16.667	8.71	6.35	9.07	0.76	1.14	0.51	15.138	0.25/0.38	0.76/1.45	0.81/1.57		28000	8500	0.014
03-582-05	-5	0.3125	0.75	0.375	0.281	0.413	0.04	0.055	0.03	652	.010/.015	.030/.062	.042/.062	11	8460	2450	0.04
		7.938	19.05	9.52	7.14	10.49	1.02	1.4	0.76	16.561	0.25/0.38	0.76/1.57	1.07/1.57		37500	11000	0.018
03-582-06	-6	0.375	0.8125	0.406	0.312	0.509	0.04	0.055	0.03	.714	.010/.015	.030/.062	.042/.062	9	11400	3090	0.05
		9.525	20.638	10.31	7.92	12.93	1.02	1.4	0.76	18.136	0.25/0.38	0.76/1.57	1.07/1.57		51000	13500	0.023
03-582-07	-7	0.4375	0.9062	0.437	0.343	0.563	0.04	0.055	0.03	.808	.010/.015	.060/.080	.052/.062	8	14800	3740	0.06
		11.112	23.017	11.1	8.71	14.3	1.02	1.4	0.76	20.523	0.25/0.38	1.52/2.03	1.32/1.57		65500	16500	0.027
03-582-08	-8	0.5	1	0.5	0.39	0.634	0.06	0.08	0.03	.878	.010/.015	.060/.080	.052/.062	8	20400	4860	0.06
		12.7	25.4	12.7	9.91	16.1	1.52	2.03	0.76	22.301	0.25/0.38	1.52/2.03	1.32/1.57		90000	21500	0.036
03-582-09	-9	0.5625	1.0937	0.562	0.437	0.664	0.06	0.08	0.03	.972	.010/.015	.060/.080	.052/.062	8	26700	6100	0.11
		14.288	27.78	14.27	11.1	16.87	1.52	2.03	0.76	24.689	0.25/0.38	1.52/2.03	1.32/1.57		118000	27000	0.05
03-582-10	-10	0.625	1.1875	0.625	0.5	0.732	0.06	0.08	0.03	1.065	.010/.015	.070/.106	.062/.078	8	33100	8080	0.14
		15.875	30.162	15.88	12.7	18.59	1.52	2.03	0.76	27.051	0.25/0.38	1.78/2.69	1.57/1.98		146000	36000	0.064
03-582-12	-12	0.75	1.4375	0.75	0.593	0.913	0.06	0.08	0.03	1.315	.010/.015	.070/.106	.062/.078	8	50000	11440	0.24
		19.05	36.512	19.05	15.06	23.19	1.52	2.03	0.76	33.401	0.25/0.38	1.78/2.69	1.57/1.98		224000	51000	0.109
03-582-13	-13	0.8125	1.5625	0.812	0.65	0.984	0.06	0.08	0.03	1.440	.010/.015	.070/.106	.062/.078	8	59000	13800	0.31
		20.638	39.688	20.62	16.51	24.99	1.52	2.03	0.76	36.576	0.25/0.38	1.78/2.69	1.57/1.98		260000	61000	0.141
03-582-14	-14	0.875	1.6562	0.875	0.703	1.054	0.06	0.08	0.03	1.534	.010/.015	.070/.106	.062/.078	8	70300	16160	0.37
		22.225	42.067	22.22	17.86	26.77	1.52	2.03	0.76	38.964	0.25/0.38	1.78/2.69	1.57/1.98		315000	72000	0.168
03-582-16	-16	1	1.875	1	0.797	1.193	0.06	0.08	0.03	1.753	.010/.015	.090/.110	.078/.093	8	77700	20850	0.53
		25.4	47.625	25.4	20.24	30.3	1.52	2.03	0.76	44.526	0.25/0.38	2.29/2.79	1.98/2.36		345000	92500	0.24
03-582-18	-18	1.125	2.125	1.125	0.9	1.334	0.06	0.08	0.03	2.003	.010/.015	.090/.110	.078/.093	8	121500	26740	0.77
		28.575	53.975	28.58	22.86	33.88	1.52	2.03	0.76	50.876	0.25/0.38	2.29/2.79	1.98/2.36		540000	119000	0.349
03-582-20	-20	1.25	2.3125	1.25	1	1.473	0.06	0.08	0.03	2.190	.010/.015	.090/.110	.078/.093	8	152000	33065	1
		31.75	58.738	31.75	25.4	37.41	1.52	2.03	0.76	55.625	0.25/0.38	2.29/2.79	1.98/2.36		680000	147000	0.454
03-582-22	-22	1.375	2.5625	1.375	1.1	1.654	0.06	0.08	0.03	2.440	.010/.015	.090/.110	.078/.093	8	186000	40120	1.17
		34.925	65.088	34.92	27.94	42.01	1.52	2.03	0.76	61.976	0.25/0.38	2.29/2.79	1.98/2.36		830000	178000	0.531
03-582-24	-24	1.5	2.8125	1.5	1.2	1.794	0.06	0.08	0.03	2.690	.010/.015	.090/.110	.078/.093	8	224000	47820	1.79
		38.1	71.438	38.1	30.48	45.57	1.52	2.03	0.76	68.326	0.25/0.38	2.29/2.79	1.98/2.36		1000000	212000	0.812

©2008, 2011, 2016 RBC Bearings Incorporated. All rights reserved.

M81936/1( )R METAL-TO-METAL SPHERICAL BEARING

- **AS81936/1 • AS81936 (FORMERLY MIL-B-81936)**
- Grooved, lubricated through race
- Material
  Inner ring: Beryllium copper per ASTM B194, B196 HRC 37 min.
  Outer ring: CRES 17-4PH, AMS 5643, HRC 28 min.
- Prepacked with MIL-PRF-81322 grease

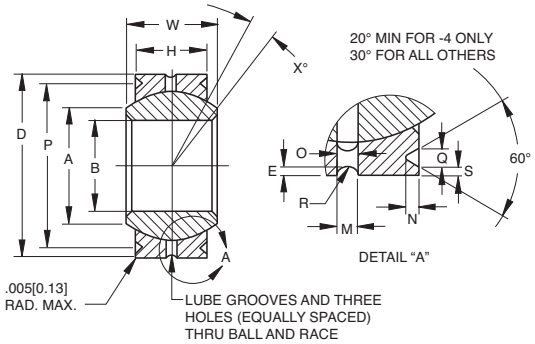

SPECIFICATIONS AND ORDERING INFORMATION

DIMENSIONS — TOLERANCES

Bearing Number	M 81936/1 Dash No.	d Bore Diameter +.0000 in. -.0005 in. +.000 mm -.013 mm	D Outside Diameter +.0000 in. -.0005 in. +.000 mm -.013 mm	W Widths +.000 in. -.005 in. +.00mm -.13mm	H Widths +.000 in. -.005 in. +.00mm -.13mm	A Min.	N +.000 in. -.015 in. +.00mm -.38mm	Q +.000 in. -.010 in. +.00mm -.25mm	S +.000 in. -.010 in. +.00mm -.25mm	P Pitch Dia.	E	R	O	X° Ref.	Radial Static Limit Load Rating	Axial Static Limit Load Rating	Weight Max.
		inch	inch	inch	inch	inch	inch	inch	inch	inch	inch	inch	inch		lbs.	lbs.	lbs.
		mm	mm	mm	mm	mm	mm	mm	mm	mm	mm	mm	mm		N	N	N
03-592-04	-4R	0.25	0.6562	0.343	0.25	0.357	0.03	0.045	0.02	.042/.078	.010/.015	.030/.062	.032/.062	12	6330	1930	0.03
		6.35	16.667	8.71	6.35	9.07	0.76	1.14	0.51	1.07/1.98	0.25/0.38	0.76/1.57	0.81/1.57		28000	8500	0.014
03-592-05	-5R	0.3125	0.75	0.375	0.281	0.413	0.04	0.055	0.03	.042/.078	.010/.015	.030/.062	.042/.062	11	8460	2450	0.04
		7.938	19.05	9.52	7.14	10.49	1.02	1.4	0.76	1.07/1.98	0.25/0.38	0.76/1.57	1.07/1.57		37500	11000	0.018
03-592-06	-6R	0.375	0.8125	0.406	0.312	0.509	0.04	0.055	0.03	.042/.078	.010/.015	.030/.062	.042/.062	9	11400	3090	0.06
		9.525	20.638	10.31	7.92	12.93	1.02	1.4	0.76	1.07/1.98	0.25/0.38	0.76/1.57	1.07/1.57		51000	13500	0.023
03-592-07	-7R	0.4375	0.9062	0.437	0.343	0.563	0.04	0.055	0.03	.065/.094	.010/.015	.060/.094	.052/.062	8	14800	3740	0.06
		11.112	23.017	11.1	8.71	14.3	1.02	1.4	0.76	1.65/2.39	0.25/0.38	1.52/2.39	1.32/1.57		65500	16500	0.027
03-592-08	-8R	0.5	1	0.5	0.39	0.634	0.06	0.08	0.03	.065/.094	.010/.015	.060/.094	.052/.062	8	20400	4860	0.08
		12.7	25.4	12.7	9.91	16.1	1.52	2.03	0.76	1.65/2.39	0.25/0.38	1.52/2.39	1.32/1.57		90000	21500	0.036
03-592-09	-9R	0.5625	1.0937	0.562	0.437	0.664	0.06	0.08	0.03	.065/.094	.010/.015	.060/.094	.052/.062	8	26700	6100	0.11
		14.288	27.78	14.27	11.1	16.87	1.52	2.03	0.76	1.65/2.39	0.25/0.38	1.52/2.39	1.32/1.57		118000	27000	0.05
03-592-10	-10R	0.625	1.1875	0.625	0.5	0.732	0.06	0.08	0.03	.073/.109	.010/.015	.070/.125	.062/.078	8	33100	8080	0.14
		15.875	30.162	15.88	12.7	18.59	1.52	2.03	0.76	1.85/2.77	0.25/0.38	1.78/3.18	1.57/1.98		146000	36000	0.064
03-592-12	-12R	0.75	1.4375	0.75	0.593	0.913	0.06	0.08	0.03	.073/.109	.010/.015	.070/.125	.062/.078	8	50000	11440	0.24
		19.05	36.512	19.05	15.06	23.19	1.52	2.03	0.76	1.85/2.77	0.25/0.38	1.78/3.18	1.57/1.98		224000	51000	0.109
03-592-13	-13R	0.8125	1.5625	0.812	0.65	0.984	0.06	0.08	0.03	.073/.109	.010/.015	.070/.125	.062/.078	8	59000	13800	0.31
		20.638	39.688	20.62	16.51	24.99	1.52	2.03	0.76	1.85/2.77	0.25/0.38	1.78/3.18	1.57/1.98		260000	61000	0.141
03-592-14	-14R	0.875	1.6562	0.875	0.703	1.054	0.06	0.08	0.03	.073/.109	.010/.015	.070/.125	.062/.078	8	70300	16160	0.37
		22.225	42.067	22.22	17.86	26.77	1.52	2.03	0.76	1.85/2.77	0.25/0.38	1.78/3.18	1.57/1.98		315000	72000	0.168
03-592-16	-16R	1	1.875	1	0.797	1.193	0.06	0.08	0.03	.082/.109	.010/.015	.090/.125	.078/.093	8	77700	20850	0.53
		25.4	47.625	25.4	20.24	30.3	1.52	2.03	0.76	2.08/2.77	0.25/0.38	2.29/3.18	1.98/2.36		345000	92500	0.24
03-592-18	-18R	1.125	2.125	1.125	0.9	1.334	0.06	0.08	0.03	.082/.109	.010/.015	.090/.125	.078/.093	8	121500	26740	0.77
		28.575	53.975	28.58	22.86	33.88	1.52	2.03	0.76	2.08/2.77	0.25/0.38	2.29/3.18	1.98/2.36		540000	119000	0.349
03-592-20	-20R	1.25	2.3125	1.25	1	1.473	0.06	0.08	0.03	.082/.109	.010/.015	.090/.125	.078/.093	8	152000	33065	1
		31.75	58.738	31.75	25.4	37.41	1.52	2.03	0.76	2.08/2.77	0.25/0.38	2.29/3.18	1.98/2.36		680000	147000	0.454
03-592-22	-22R	1.375	2.5625	1.375	1.1	1.654	0.06	0.08	0.03	.082/.109	.010/.015	.090/.125	.078/.093	8	186000	40120	1.17
		34.925	65.088	34.92	27.94	42.01	1.52	2.03	0.76	2.08/2.77	0.25/0.38	2.29/3.18	1.98/2.36		830000	178000	0.531
03-592-24	-24R	1.5	2.8125	1.5	1.2	1.794	0.06	0.08	0.03	.082/.109	.010/.015	.090/.125	.078/.093	8	224000	47820	1.79
		38.1	71.438	38.1	30.48	45.57	1.52	2.03	0.76	2.08/2.77	0.25/0.38	2.29/3.18	1.98/2.36		1000000	212000	0.812

©2008, 2011, 2016 RBC Bearings Incorporated. All rights reserved.

M81936/2( ) METAL-TO-METAL SPHERICAL BEARING

AS81936/2 • AS81936 (FORMERLY MIL-B-81936)

- Chamfered, lubricated through ball and race
- Material
  Inner ring: Beryllium copper per ASTM B194, B196 HRC 37 min.
  Outer ring: CRES 17-4PH, AMS 5643, HRC 28 min.
- Prepacked with MIL-PRF-81322 grease

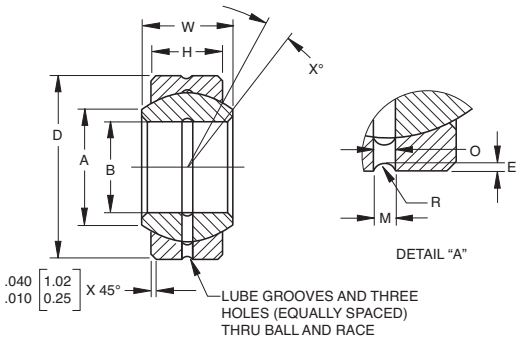

SPECIFICATIONS AND ORDERING INFORMATION

DIMENSIONS — TOLERANCES

Bearing Number	M 81936/2 Dash No.	B Bore Diameter +.0000 in. -.0005 in. +.000 mm -.013 mm	D Outside Diameter +.0000 in. -.0005 in. +.000 mm -.013 mm	W Widths +.000 in. -.005 in. +.00mm -.13mm	H Widths +.000 in. -.005 in. +.00mm -.13mm	A Min.	M	E	R	O	X° Ref.	Radial Static Limit Load Rating	Axial Static Limit Load Rating	Weight Max.
		inch	inch	inch	inch	inch	inch	inch	inch	inch		lbs.	lbs.	lbs.
		mm	mm	mm	mm	mm	mm	mm	mm	mm		N	N	N
03-580-04	-4	0.25	0.6562	0.343	.250	0.357	.042/.078	.010/.015	.030/.057	.032/.062	12	6330	1930	0.03
		6.35	16.667	8.71	6.35	9.07	1.07/1.98	0.25/0.38	0.76/1.45	0.81/1.57		28000	8500	0.014
03-580-05	-5	0.3125	0.75	0.375	.281	.413	.042/.078	.010/.015	.030/.062	.042/.062	11	8460	2450	0.04
		7.938	19.05	9.52	7.14	10.49	1.07/1.98	0.25/0.38	0.76/1.57	1.07/1.57		37500	11000	0.018
03-580-06	-6	0.375	0.8125	0.406	.312	0.509	.042/.078	.010/.015	.030/.062	.042/.062	9	11400	3090	0.06
		9.525	20.638	10.31	7.92	12.93	1.07/1.98	0.25/0.38	0.76/1.57	1.07/1.57		51000	13500	0.023
03-580-07	-7	0.4375	0.9062	0.437	.343	0.563	.065/.094	.010/.015	.060/.080	.052/.062	8	14800	3740	0.06
		11.112	23.017	11.1	8.71	14.3	1.65/2.39	0.25/0.38	1.52/2.03	1.32/1.57		65500	16500	0.027
03-580-08	-8	0.5	1	0.5	.39	0.634	.065/.094	.010/.015	.060/.080	.052/.062	8	20400	4860	0.08
		12.7	25.4	12.7	9.91	16.1	1.65/2.39	0.25/0.38	1.52/2.03	1.32/1.57		90000	21500	0.036
03-580-09	-9	0.5625	1.0937	0.562	.437	0.664	.065/.094	.010/.015	.060/.080	.052/.062	8	26700	6100	0.11
		14.288	27.78	14.27	11.1	16.87	1.65/2.39	0.25/0.38	1.52/2.03	1.32/1.57		118000	27000	0.05
03-580-10	-10	0.625	1.1875	0.625	.5	0.732	.073/.109	.010/.015	.070/.106	.062/.078	8	33100	8080	0.14
		15.875	30.162	15.88	12.7	18.59	1.85/2.77	0.25/0.38	1.78/2.69	1.57/1.98		146000	36000	0.064
03-580-12	-12	0.75	1.4375	0.75	.593	0.913	.073/.109	.010/.015	.070/.106	.062/.078	8	50000	11440	0.24
		19.05	36.512	19.05	15.06	23.19	1.85/2.77	0.25/0.38	1.78/2.69	1.57/1.98		224000	51000	0.109
03-580-13	-13	0.8125	1.5625	0.812	.65	0.984	.073/.109	.010/.015	.070/.106	.062/.078	8	59000	13800	0.31
		20.638	39.688	20.62	16.51	24.99	1.85/2.77	0.25/0.38	1.78/2.69	1.57/1.98		260000	61000	0.141
03-580-14	-14	0.875	1.6562	0.875	.703	1.054	.073/.109	.010/.015	.070/.106	.062/.078	8	70300	16160	0.37
		22.225	42.067	22.22	17.86	26.77	1.85/2.77	0.25/0.38	1.78/2.69	1.57/1.98		315000	72000	0.168
03-580-16	-16	1	1.875	1	.797	1.193	.082/.109	.010/.015	.090/.110	.078/.093	8	77700	20850	0.53
		25.4	47.625	25.4	20.24	30.3	2.08/2.77	0.25/0.38	2.29/2.79	1.98/2.36		345000	92500	0.24
03-580-18	-18	1.125	2.125	1.125	.9	1.334	.082/.109	.010/.015	.090/.110	.078/.093	8	121500	26740	0.77
		28.575	53.975	28.58	22.86	33.88	2.08/2.77	0.25/0.38	2.29/2.79	1.98/2.36		540000	119000	0.349
03-580-20	-20	1.25	2.3125	1.25	1	1.473	.082/.109	.010/.015	.090/.110	.078/.093	8	152000	33065	1
		31.75	58.738	31.75	25.4	37.41	2.08/2.77	0.25/0.38	2.29/2.79	1.98/2.36		680000	147000	0.454
03-580-22	-22	1.375	2.5625	1.375	1.1	1.654	.082/.109	.010/.015	.090/.110	.078/.093	8	186000	40120	1.17
		34.925	65.088	34.92	27.94	42.01	2.08/2.77	0.25/0.38	2.29/2.79	1.98/2.36		830000	178000	0.531
03-580-24	-24	1.5	2.8125	1.5	1.2	1.794	.082/.109	.010/.015	.090/.110	.078/.093	8	224000	47820	1.79
		38.1	71.438	38.1	30.48	45.57	2.08/2.77	0.25/0.38	2.29/2.79	1.98/2.36		1000000	212000	0.812

©2008, 2011, 2016 RBC Bearings Incorporated. All rights reserved.

M81936/2( )R METAL-TO-METAL SPHERICAL BEARING

AS81936/2 • AS81936 (FORMERLY MIL-B-81936)

- Chamfered, lubricated through race
- Material
  Inner ring: Beryllium copper per ASTM B194, B196 HRC 37 min.
  Outer ring: CRES 17-4PH, AMS 5643, HRC 28 min.
- Prepacked with MIL-PRF-81322 grease

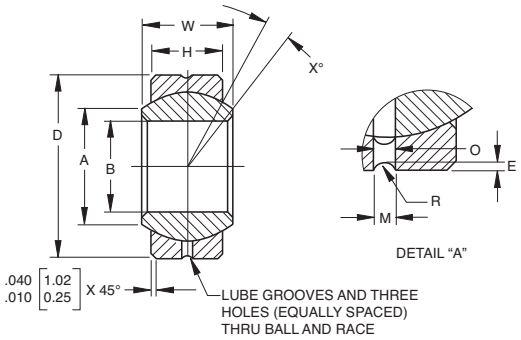

SPECIFICATIONS AND ORDERING INFORMATION

DIMENSIONS — TOLERANCES

Bearing Number	M 81936/2 Dash No.	B Bore Diameter +.0000 in. -.0005 in. +.000 mm -.013 mm	D Outside Diameter +.0000 -.0005 +.000 mm -.013 mm	W Widths +.000 in. -.005 in. +.00mm -.13mm	H Widths +.000 in. -.005 in. +.00mm -.13mm	A Min.	M	E	R	O	X° Ref.	Radial Static Limit Load Rating	Axial Static Limit Load Rating	Weight Max.
		inch	inch	inch	inch	inch	inch	inch	inch	inch		lbs.	lbs.	lbs.
		mm	mm	mm	mm	mm	mm	mm	mm	mm		N	N	N
03-590-04	-4R	0.25	0.6562	0.343	0.25	0.357	.042/.078	.010/.015	.030/.057	.032/.062	12	6330	1930	0.03
		6.35	16.667	8.71	6.35	9.07	1.07/1.98	0.25/0.38	0.76/1.45	0.81/1.57		28000	8500	0.014
03-590-05	-5R	0.3125	0.75	0.375	0.281	0.413	.042/.078	.010/.015	.030/.062	.042/.062	11	8460	2450	0.04
		7.938	19.05	9.52	7.14	10.49	1.07/1.98	0.25/0.38	0.76/1.57	1.07/1.57		37500	11000	0.018
03-590-06	-6R	0.375	0.8125	0.406	0.312	0.509	.042/.078	.010/.015	.030/.062	.042/.062	9	11400	3090	0.05
		9.525	20.638	10.31	7.92	12.93	1.07/1.98	0.25/0.38	0.76/1.57	1.07/1.57		51000	13500	0.023
03-590-07	-7R	0.4375	0.9062	0.437	0.343	0.563	.065/.094	.010/.015	.060/.080	.052/.062	8	14800	3740	0.06
		11.112	23.017	11.1	8.71	14.3	1.65/2.39	0.25/0.38	1.52/2.03	1.32/1.57		65500	16500	0.027
03-590-08	-8R	0.5	1	0.5	0.39	0.634	.065/.094	.010/.015	.060/.080	.052/.062	8	20400	4860	0.08
		12.7	25.4	12.7	9.91	16.1	1.65/2.39	0.25/0.38	1.52/2.03	1.32/1.57		90000	21500	0.036
03-590-09	-9R	0.5625	1.0937	0.562	0.437	0.664	.065/.094	.010/.015	.060/.080	.052/.062	8	26700	6100	0.11
		14.288	27.78	14.27	11.1	16.87	1.65/2.39	0.25/0.38	1.52/2.03	1.32/1.57		118000	27000	0.05
03-590-10	-10R	0.625	1.1875	0.625	0.5	0.732	.073/.109	.010/.015	.070/.106	.062/.078	8	33100	8080	0.14
		15.875	30.162	15.88	12.7	18.59	1.85/2.77	0.25/0.38	1.78/2.69	1.57/1.98		146000	36000	0.064
03-590-12	-12R	0.75	1.4375	0.75	0.593	0.913	.073/.109	.010/.015	.070/.106	.062/.078	8	50000	11440	0.24
		19.05	36.512	19.05	15.06	23.19	1.85/2.77	0.25/0.38	1.78/2.69	1.57/1.98		224000	51000	0.109
03-590-13	-13R	0.8125	1.5625	0.812	0.65	0.984	.073/.109	.010/.015	.070/.106	.062/.078	8	59000	13800	0.31
		20.638	39.688	20.62	16.51	24.99	1.85/2.77	0.25/0.38	1.78/2.69	1.57/1.98		260000	61000	0.141
03-590-14	-14R	0.875	1.6562	0.875	0.703	1.054	.073/.109	.010/.015	.070/.106	.062/.078	8	70300	16160	0.37
		22.225	42.067	22.22	17.86	26.77	1.85/2.77	0.25/0.38	1.78/2.69	1.57/1.98		315000	72000	0.168
03-590-16	-16R	1	1.875	1	0.797	1.193	.082/.109	.010/.015	.090/.110	.078/.093	8	77700	20850	0.53
		25.4	47.625	25.4	20.24	30.3	2.08/2.77	0.25/0.38	2.29/2.79	1.98/2.36		345000	92500	0.24
03-590-18	-18R	1.125	2.125	1.125	0.9	1.334	.082/.109	.010/.015	.090/.110	.078/.093	8	121500	26740	0.77
		28.575	53.975	28.58	22.86	33.88	2.08/2.77	0.25/0.38	2.29/2.79	1.98/2.36		540000	119000	0.349
03-590-20	-20R	1.25	2.3125	1.25	1	1.473	.082/.109	.010/.015	.090/.110	.078/.093	8	152000	33065	1
		31.75	58.738	31.75	25.4	37.41	2.08/2.77	0.25/0.38	2.29/2.79	1.98/2.36		680000	147000	0.454
03-590-22	-22R	1.375	2.5625	1.375	1.1	1.654	.082/.109	.010/.015	.090/.110	.078/.093	8	186000	40120	1.17
		34.925	65.088	34.92	27.94	42.01	2.08/2.77	0.25/0.38	2.29/2.79	1.98/2.36		830000	178000	0.531
03-590-24	-24R	1.5	2.8125	1.5	1.2	1.794	.082/.109	.010/.015	.090/.110	.078/.093	8	224000	47820	1.79
		38.1	71.438	38.1	30.48	45.57	2.08/2.77	0.25/0.38	2.29/2.79	1.98/2.36		1000000	212000	0.812

©2008, 2011, 2016 RBC Bearings Incorporated. All rights reserved.

MS21154B GROOVED RACE & MS21155B CHAMFERED RACE, BRONZE SERIES METAL-TO-METAL SPHERICAL BEARING, NARROW

- **Qualified to AS8976 (formerly MIL-B-8976)**
- Narrow series, metal-to-metal
- Material MS21154S & MS21155S steel series 03-503 and 03-505
  Outer ring: Alloy steel, AMS-S-5000, AMS-S-6758 or AMS-S-6050
  Inner ring: CRES 440C, HRC 55 min. AMS 5630
- Material MS21154B & MS21155B bronze series 03-523 and 03-525
  Outer ring: Aluminum bronze
  Inner ring: CRES 440C, HRC 55 min. AMS 5630

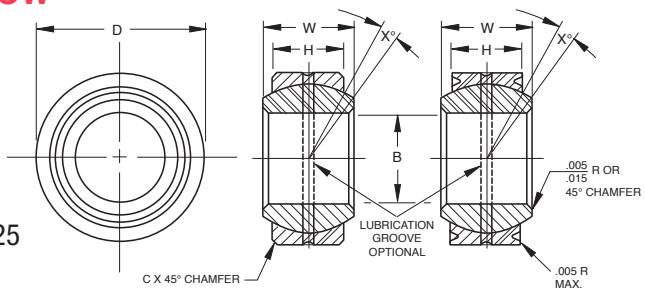

Chamfered Grooved

SPECIFICATIONS AND ORDERING INFORMATION

DIMENSIONS — TOLERANCES

BLN-x-2210 Chamfered / BLN-x-2215 Grooved Bronze Race	BSN-x-2211 Chamfered / BSN-x-2216 Grooved Steel Race	B		D		H		W		A		C(1)		X°
		+.0000, -.0005 +.000, -.013		+.0000, -.0005 +.000, .013		±.005 ±.13		+.000, -.002 +.00, -.05		Min.		+.020, -.010 +.51, -.25		Ref.
Chamfered/Grooved Dash Numbers		in.	mm	in.	mm	in.	mm	in.	mm	in.	mm	in.	mm	
-03		.1900	4.826	.5625	14.288	.218	5.54	.281	7.14	.293	7.44	.020	0.51	10
-04		.2500	6.350	.6562	16.667	.250	6.35	.343	8.71	.364	9.25	.020	0.51	10
-05		.3125	7.938	.7500	19.050	.281	7.14	.375	9.52	.419	10.64	.020	0.51	10
-06		.3750	9.525	.8125	20.638	.312	7.92	.406	10.31	.475	12.06	.020	0.51	9
-07		.4375	11.113	.9062	23.017	.343	8.71	.437	11.10	.530	13.46	.020	0.51	8
-08		.5000	12.700	1.0000	25.400	.390	9.91	.500	12.70	.600	15.24	.030	0.76	8
-09		.5625	14.288	1.0937	27.780	.437	11.10	.562	14.27	.670	17.02	.030	0.76	8
-10		.6250	15.875	1.1875	30.163	.500	12.70	.625	15.88	.739	18.77	.030	0.76	8
-12		.7500	19.050	1.4375	36.513	.593	15.06	.750	19.05	.920	23.37	.030	0.76	8
-14		.8750	22.225	1.5625	39.688	.703	17.86	.875	22.22	.980	24.89	.030	0.76	8
-16		1.0000	25.400	1.7500	44.450	.797	20.24	1.000	25.40	1.118	28.40	.030	0.76	9
-20		1.2500	31.750	2.0000	50.800	.942	23.93	1.093	27.76	1.390	35.31	.030	0.76	6
-24		1.5000	38.100	2.4375	61.913	1.130	28.70	1.312	33.32	1.750	44.45	.030	0.76	6
-28		1.7500	44.450	2.8125	71.438	1.317	33.45	1.531	38.89	2.000	50.80	.030	0.76	6
-32		2.0000	50.800	3.1875	80.963	1.505	38.23	1.750	44.45	2.225	56.51	.030	0.76	6

(1)Chamfered Type only. (2)Grooved Type only. See page 17 for groove dimensions

LOAD RATINGS

BLN-x-2210 Chamfered / BLN-x-2215 Grooved Bronze Race	BSN-x-2211 Chamfered / BSN-x-2216 Grooved Steel Race	Axial Static Limit Load Bronze Race		Radial Limit Load Rating(1) CRES		Radial Limit Load Rating(1) Aluminum Bronze		Axial Static Limit Load Steel Race		Weight Approx.	
Dash Numbers		lbs.	N	lbs.	N	lbs.	N	lbs.	N	lbs.	kg
-03		850	3780	4600	20500	2800	12500	2100	9340	.02	.009
-04		1100	4890	7080	31500	4300	19100	2800	12455	.02	.009
-05		1400	6230	8500	37800	5200	23100	3550	15790	.03	.014
-06		1760	7830	11050	49200	6750	30000	4400	19570	.04	.018
-07		2150	9560	13900	61800	8500	37800	5400	24020	.05	.023
-08		2800	12455	18850	83800	11500	51200	7050	31360	.07	.032
-09		3550	15790	25500	114000	15600	69400	8900	39590	.09	.041
-10		4650	20685	31900	142000	19500	86700	11700	52040	.12	.054
-12		6575	29245	46750	208000	28500	127000	16500	73395	.21	.095
-14		9300	41365	62750	279000	38300	170000	23300	103640	.27	.122
-16		12000	53380	83350	371000	51000	227000	30000	133450	.29	.131
-20		38000	170000	114000	506000	71000	316000	12160	54000	.39	.176
-24		38000	170000	169000	752000	106000	470000	12160	54000	.96	.432
-28		38000	170000	228000	1016000	143000	635000	12160	54000	1.48	.666
-32		38000	170000	292000	1297000	182000	810000	12160	54000	2.10	.945

(1)Load ratings based on AS21155 for CRES and Aluminum bronze

RBC Aerospace P/N	Style	Race	Part No.
BLN-x-2210	Chamfered	Bronze	MS21155B-x
BSN-x-2211	Chamfered	Steel	MS21155S-x
BLN-x-2215	Grooved	Bronze	MS21154B-x
BSN-x-2216	Grooved	Steel	MS21154S-x

©2008, 2011, 2016 RBC Bearings Incorporated. All rights reserved.

EN2335

European Standards

- Swaged series, Corrosion resistant steel
- All dimensions are metric
- Material
  Outer ring: CRES 17-4PH, EN3490 or EN3161
  Inner ring: CRES 440C, EN2030
- Chamfered or grooved type
- Lubrication holes and grooves on the race
- Lubrication holes and grooves on the ball

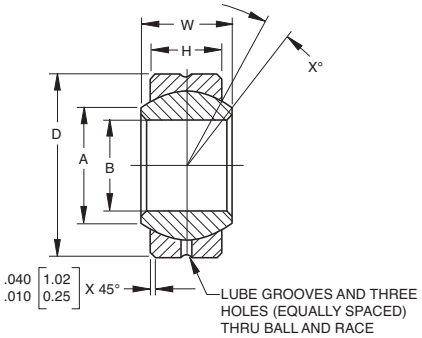

SPECIFICATIONS AND ORDERING INFORMATION

	Ball					Outer race			Chamfer	V-groove			Groove Pitch Dia.	Loads		Movement					
Dash No	ø B Bore		ø A	W Width	ø K	ø D O. diam.		H Width	C	ø P	N	R	E	Radial Cs	Axial Ca	Axial play		Radial play		Angle α°	Weight
		Tol. (µm)	mini	h11	approx.		Tol. (µm)	± 0.1 - 0.25		+ 0.1 - 0.0	+ 0.0 - 0.2	+ 0.1 - 0.0		(kN)		N	P (µm)	N	P maxi. (µm)	mini.	(g)
04	4		6	5	8	12		3						7.2	0.45					16	3
05	5		8	6	10	14	+0 -8	4	0.3					12.6	0.8					13	5
06	6			6		14		4	to					16	1	35	5			13	5
08	8	+0 -8	10	8	13	16		5	0.8					21	1.8	to	to	20	10	15	8
10	10		13	9	16	19		6						31	2.5	75	35			12	12
12	12		15	10	18	22	+0 -9	7	0.5	20.2			20.2	40.5	3.5					11	17
15	15		18	12	22	26		9	to	24.2	0.7	0.2	24.2	70	5.3					8	32
17	17		20	14	25	30		10	1.2	28.2			28.2	91.4	6.7	40 to 80	5 to 40	25	12	10	49
20	20	+0 -10	24	16	29	35	+0 -11	12	0.6	33.2			33.2	130	9.8					9	65
25	25		29	20	36	42		16	to	39.4	0.9	0.3	39.4	216.7	18	50 to 100	5 to 50	30	15	7	115
30	30		34	22	41	47		18	1.5	44.4			44.4	277.5	25					6	160

Bearing configuration	Part number designations and options
EN2335 **AP** 12 **ERT**	12mm bore with Nato grease G354/Mil-G-23827, reduced internal clearance, no lubrication holes and grooves, swaging grooves and passivated per ISO8075
Suffix **A** is for grease type	**A** = Nato G354/Mil-G-23827 or **B** = Nato G395/Mil-G-81322
Suffix **P** is for radial and axial play	**P** = Reduced internal clearance or **N** = Normal internal clearance
Bore size	12 = 12mm bore
Suffix **E** is for type of lubrication	**E** = No lubrication holes and grooves, **F** = Lubrication holes and grooves in the ball **G** = Lubrication holes and grooves in the race
Suffix **R** is for type of mounting	**R** = Grooved type (sizes 12 and higher only) or **S** = Chamfered type
Suffix **T** is for passivation	**T** = Passivation per ISO8075 or Blank = No passivation

©2008, 2011, 2016 RBC Bearings Incorporated. All rights reserved.

METAL-TO-METAL SPHERICAL BEARING, WIDE

- Material Option #1
  Outer ring: 17-4PH CRES (Corrosion resistant steel) AMS 5643
  Inner ring: CRES 440C, HRC 55 min. AMS 5630
- Material Option #2
  Outer ring: Aluminum bronze
  Inner ring: CRES 440C CRES, HRC 55 min. AMS 5630

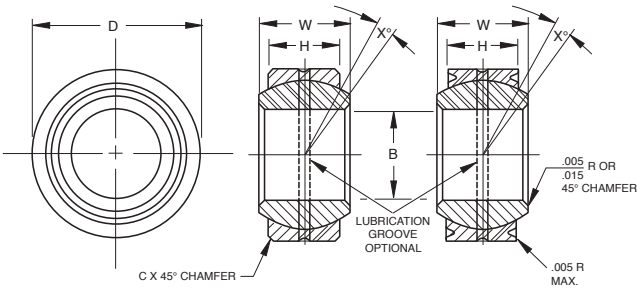

Chamfered Grooved

SPECIFICATIONS AND ORDERING INFORMATION

DIMENSIONS — TOLERANCES

MATERIAL OPTION #1		MATERIAL OPTION #2		B		D		H		W		A		C[1]		P[2]		X°
Chamfered 03-504 WSSxxJ Grooved 03-506 WSSGxxJ		Chamfered 03-524 WBxxJ Grooved 03-526 WBGxxJ		+.0000, -.0005 +.000, -.013		+.0000, -.0005 +.000, -.013		±.005 ±.13		+.000, -.002 +.00, -.05		Min.		+.015, -.000 +.38, -.00		Groove Pitch Diameter +.000 in., -.010 in. +.00 mm, -.25mm		Ref.
Dash No.		Dash No.		in.	mm	in.	mm	in.	mm	in.	mm	in.	mm	in.	mm	in.	mm	
-03	03	-03	03	.1900	4.826	.6250	15.875	.327	8.31	.437	11.10	.300	7.62	.015	.38	.563	14.30	15
-04	04	-04	04	.2500	6.350	.6250	15.875	.327	8.31	.437	11.10	.300	7.62	.015	.38	.563	14.30	15
-05	05	-05	05	.3125	7.938	.6875	17.462	.317	8.05	.437	11.10	.360	9.14	.015	.38	.625	15.87	14
-06	06	-06	06	.3750	9.525	.8125	20.638	.406	10.31	.500	12.70	.466	11.84	.015	.38	.714	18.14	8
-07	07	-07	07	.4375	11.112	.9375	23.813	.442	11.23	.562	14.27	.537	13.64	.015	.38	.839	21.31	10
-08	08	-08	08	.5000	12.700	1.0000	25.400	.505	12.83	.625	15.88	.607	15.42	.020	.51	.902	22.91	9
-09	09	-09	09	.5625	14.288	1.1250	28.575	.536	13.61	.687	17.45	.721	18.31	.020	.51	1.027	26.09	10
-10	10	-10	10	.6250	15.875	1.1875	30.163	.567	14.40	.750	19.05	.747	18.97	.020	.51	1.089	27.66	12
-12	12	-12	12	.7500	19.050	1.3750	34.925	.630	16.00	.875	22.22	.845	21.46	.020	.51	1.253	31.83	13
-14	14	-14	14	.8750	22.225	1.6250	41.275	.755	19.18	.875	22.22	.995	25.27	.020	.51	1.503	38.18	6
-16	16	-16	16	1.0000	25.400	2.1250	53.975	1.005	25.53	1.375	34.92	1.269	32.23	.020	.51	2.003	50.88	12
-20	20	-20	20	1.2500	31.750	2.3750	60.325	1.130	28.70	1.500	38.10	1.500	38.10	.020	.51	2.253	57.23	12
-24	24	-24	24	1.5000	38.100	2.6875	68.263	1.223	31.06	1.687	42.85	1.750	44.45	.030	.76	2.565	65.15	13
-28	28	-28	28	1.7500	44.450	3.0000	76.200	1.317	33.45	1.812	46.02	2.050	52.07	.030	.76	2.878	73.10	12
-32	32	-32	32	2.0000	50.800	3.2500	82.550	1.380	35.05	1.937	49.20	2.250	57.15	.030	.76	3.128	79.45	12

[1]Chamfered Type only. [2]Grooved Type only. See page 17 for groove dimensions.

LOAD RATINGS

MATERIAL OPTION #1		MATERIAL OPTION #2		Axial Static Limit Load Steel Race		Radial Limit Load Rating[1] CRES		Radial Limit Load Rating[1] Aluminum Bronze		Axial Static Limit Load Bronze Race		Weight Approx.	
Chamfered 03-504 WSSxxJ Grooved 03-506 WSSGxxJ		Chamfered 03-524 WBxxJ Grooved 03-526 WBGxxJ											
Dash No.		Dash No.		lbf.	N	lbf.	N	lbf.	N	lbf.	N	lbs.	kg
-03	03	-03	03	4900	21600	8400	37000	5300	23400	1770	7800	.03	.014
-04	04	-04	04	4900	21600	8400	37000	5300	23400	1770	7800	.03	.014
-05	05	-05	05	6060	27000	9600	43000	6000	26700	1640	7350	.03	.014
-06	06	-06	06	8310	36500	15400	69000	9600	42800	2630	11600	.05	.023
-07	07	-07	07	11750	52000	20200	90000	12700	56300	3650	16300	.08	.036
-08	08	-08	08	14950	65500	27000	120000	16900	75000	4970	22000	.10	.045
-09	09	-09	09	18100	80000	33700	150000	21100	94000	5370	24000	.14	.063
-10	10	-10	10	20250	90000	38900	173000	24300	108000	6130	27500	.16	.072
-12	12	-12	12	26200	116000	51500	230000	32200	143000	7730	34500	.23	.104
-14	14	-14	14	33600	150000	68800	306000	43000	191000	10800	48000	.35	.158
-16	16	-16	16	56250	250000	127000	563000	79000	352000	19300	86500	.97	.437
-20	20	-20	20	56250	250000	163000	726000	102000	454000	19300	86500	1.10	.495
-24	24	-24	24	56250	250000	203000	901000	127000	563000	19300	86500	1.45	.653
-28	28	-28	28	56250	250000	246000	1095000	154000	685000	19300	86500	1.85	.833
-32	32	-32	32	56250	250000	277000	1234000	173000	771000	19300	86500	2.15	.968

[1]Load ratings based on AS21155 for CRES and Aluminum bronze. Limited by pin bending.

©2008, 2011, 2016 RBC Bearings Incorporated. All rights reserved.

HIGH MISALIGNMENT SELF-LUBRICATED SPHERICAL BEARING

- Operating temperature range -65°F to +325°F (-53.9°C to +163°C)
- Low wear
- Material
  Outer ring: CRES 17-4PH, AMS 5643
  Inner ring: CRES 440C, Rc 58 min. AMS 5630
  Liner: Fibriloid® or "E" Uniflon® qualified to AS81820

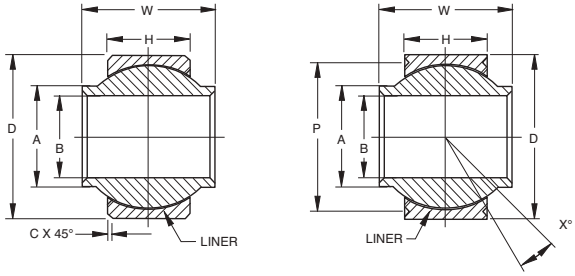

Chamfered Grooved

SPECIFICATIONS AND ORDERING INFORMATION

DIMENSIONS — TOLERANCES

Chamfered 03-828 NE / Grooved 03-829 NEG		B		D		H		W		A		C[1] Chamfer		P[2] Grooved		X°
		+0.000, -.0005 / +0.000, -.013		+0.000, -.0005 / +0.000, -.013		+0.005, -.005 / +0.13, -.13		+.000, -.002 / +.00, -.05		Ref.		+.010, -.000 / +.25, -.00		+.005, -.005 / +.13, -.13		Ref.
		in.	mm	in.	mm	in.	mm	in.	mm	in.	mm	in.	mm	in.	mm	
03	03-16	0.1900	4.826	0.5625	14.288	0.210	5.33	0.500	12.70	0.319	8.10	0.010	0.25	0.493	12.52	15
04	04-19	0.2500	6.350	0.7400	18.796	0.255	6.48	0.593	15.06	0.390	9.91	0.010	0.25	0.670	17.02	24
05	05-20	0.3125	7.938	0.6875	17.463	0.255	6.48	0.625	15.88	0.418	10.62	0.010	0.25	0.618	15.70	20
06	06-26	0.3750	9.525	0.9060	23.012	0.345	8.76	0.813	20.65	0.512	13.00	0.020	0.51	0.836	21.23	23
07	07-28	0.4375	11.113	1.0000	25.400	0.345	8.76	0.875	22.23	0.618	15.70	0.020	0.51	0.930	23.62	22
08	08-30	0.5000	12.700	1.1250	28.575	0.401	10.19	0.937	23.80	0.730	18.54	0.020	0.51	1.055	26.80	20
10	10-38	0.6250	15.875	1.3750	34.925	0.567	14.40	1.200	30.48	0.856	21.74	0.020	0.51	1.275	32.39	20
12	12-41	0.7500	19.050	1.5625	39.688	0.620	15.75	1.280	32.51	0.970	24.64	0.030	0.76	1.438	36.53	18
14	14-45	0.8750	22.225	1.7500	44.450	0.625	15.88	1.400	35.56	1.140	28.96	0.030	0.76	1.625	41.28	18
16	16-60	1.0000	25.400	2.1250	53.975	0.835	21.21	1.875	47.62	1.278	32.46	0.030	0.76	2.000	50.80	21
18	18-60	1.1250	28.575	2.3125	58.738	0.942	23.93	1.875	47.63	1.400	35.56	0.030	0.76	2.188	55.58	20
20	20-60	1.2500	31.750	2.5000	63.500	1.005	25.53	1.875	47.63	1.523	38.68	0.030	0.76	2.375	60.33	21
22	22-68	1.3750	34.925	2.7500	69.850	1.097	27.86	2.125	53.98	1.670	42.42	0.030	0.76	2.625	66.68	22
24	24-72	1.5000	38.100	3.0000	76.200	1.175	29.85	2.250	57.15	1.800	45.72	0.030	0.76	2.875	73.03	21

[1]Chamfered Type only. [2]Grooved Type only. See page 17 for groove dimensions.

LOAD RATINGS

Chamfered 03-828	NE	Grooved 03-829	NEG	Oscillating Radial Load Rating[1]		Radial Limit Load Rating[1]		No Load Rational Starting Torque		Weight Approx.	
				lbf.	N	lbf.	N	in.-lbs.	N-m	lbs.	kg
03	03-16	03	03-16	3700	16500	6400	28500	.25-5	.03-.56	0.02	0.008
04	04-19	04	04-19	5300	23600	10700	47600	.25-5	.03-.56	0.04	0.016
05	05-20	05	05-20	5300	23600	10700	47600	1-15	.11-1.7	0.03	0.013
06	06-26	06	06-26	9500	42300	19100	85000	1-15	.11-1.7	0.07	0.031
07	07-28	07	07-28	10800	48000	21700	96500	1-15	.11-1.7	0.10	0.043
08	08-30	08	08-30	14400	64100	28800	128100	1-15	.11-1.7	0.16	0.072
10	10-38	10	10-38	25100	111700	50600	225100	1-15	.11-1.7	0.25	0.111
12	12-41	12	12-41	30200	134300	60500	269100	1-15	.11-1.7	0.32	0.143
14	14-45	14	14-45	34300	152600	68600	305100	1-24	.11-2.7	0.43	0.195
16	16-60	16	16-60	55600	247300	111200	494600	1-24	.11-2.7	0.83	0.377
18	18-60	18	18-60	68900	306500	138100	614300	1-24	.11-2.7	1.10	0.497
20	20-60	20	20-60	80300	357200	160600	714400	1-24	.11-2.7	1.32	0.598
22	22-68	22	22-68	97500	433700	195300	868700	1-24	.11-2.7	1.80	0.816
24	24-72	24	24-72	111700	496900	223400	993700	1.24	.11-2.7	2.22	1.008

[1]Load ratings based on AS81820 except limitations due to pin bending.

©2008, 2011, 2016 RBC Bearings Incorporated. All rights reserved.

EN2501 HIGH-MISALIGNMENT SELF-LUBRICATED SPHERICAL BEARING

European Standards

- All dimensions are metric
- Extended inner ring
- Material
  Outer ring: CRES 17-4PH, AMS 5643
  Inner ring: CRES 440C, AMS 5630/EN2030
  Liner: Qualified to AS81820

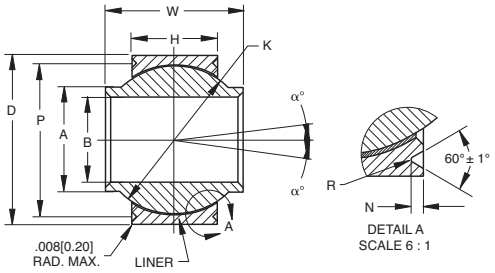

SPECIFICATIONS AND ORDERING INFORMATION

	Ball						Outer race			V-groove (R)			Loads			Movement		
Dash No	ø B Bore		ø A	W Width		ø K	ø D O. diam.		H Width	ø P	N	R	Radial Cs	Axial Ca	Oscillating Load	Angle α°	No-load rotational breakaway torque	Weight
		Tol. (m)	Mini	+ 0.00 - 0.06				Tol. (m)	+ 0.1 - .01	+ 0.1 - 0.0	+ 0.0 - 0.2	+ 0.1 - 0.0		(kN)			(Nm)	(g)
06	6	0 -8	9	14	0.3 to 0.8	15	18	0 -8	8	16.2	0.7	0.2	41.5	5.1	16.6	9	0.12 to 0.80	15
08	8		11	15		17.5	21	0 -9	10	18.4	0.9	0.3	63.0	9.5	25.2	8		22
10	10		13.5	20		22.2	26		13	23.4			105.1	18.6	42.2	10		48

Bearing configuration	Part number designations for a 8mm bore spherical bearing
Basic P/N	EN2501-08

©2008, 2011, 2016 RBC Bearings Incorporated. All rights reserved.

HIGH MISALIGNMENT METAL-TO-METAL SPHERICAL BEARING

- Material
  Outer ring: CRES 17-4PH, AMS 5643
  Inner ring: CRES 440C, Rc58 min. AMS 5630

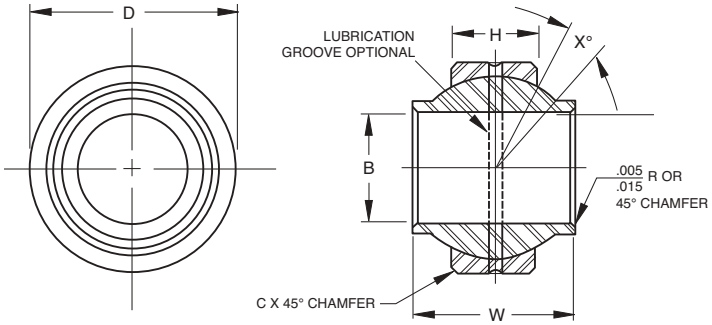

SPECIFICATIONS AND ORDERING INFORMATION

DIMENSIONS — TOLERANCES

Chamfered 03-508 N / Grooved 03-528 NG		B		D		H		W		A		C[1] Chamfer		P[2] Grooved		X°
		+0.000, -.0005 / +0.000, -.013		+0.000, -.0005 / +0.000, -.013		+0.005, -.005 / +0.13, -.13		+.000, -.002 / +.00, -.05		Ref.		+.010, -.000 / +.25, -.00		+.005, -.005 / +.13, -.13		Ref.
		in.	mm	in.	mm	in.	mm	in.	mm	in.	mm	in.	mm	in.	mm	
03	03-16	0.1900	4.826	0.5625	14.288	0.210	5.33	0.500	12.70	0.319	8.10	0.010	0.25	0.493	12.52	15
04	04-19	0.2500	6.350	0.7400	18.796	0.255	6.48	0.593	15.06	0.390	9.91	0.010	0.25	0.670	17.02	24
05	05-20	0.3125	7.938	0.6875	17.463	0.255	6.48	0.625	15.88	0.418	10.62	0.010	0.25	0.618	15.70	20
06	06-26	0.3750	9.525	0.9060	23.012	0.345	8.76	0.813	20.65	0.512	13.00	0.020	0.51	0.836	21.23	23
07	07-28	0.4375	11.113	1.0000	25.400	0.345	8.76	0.875	22.23	0.618	15.70	0.020	0.51	0.930	23.62	22
08	08-30	0.5000	12.700	1.1250	28.575	0.401	10.19	0.937	23.80	0.730	18.54	0.020	0.51	1.055	26.80	20
10	10-38	0.6250	15.875	1.3750	34.925	0.567	14.40	1.200	30.48	0.856	21.74	0.020	0.51	1.275	32.39	20
12	12-41	0.7500	19.050	1.5625	39.688	0.620	15.75	1.280	32.51	0.970	24.64	0.030	0.76	1.438	36.53	18
14	14-45	0.8750	22.225	1.7500	44.450	0.625	15.88	1.400	35.56	1.140	28.96	0.030	0.76	1.625	41.28	18
16	16-60	1.0000	25.400	2.1250	53.975	0.835	21.21	1.875	47.62	1.278	32.46	0.030	0.76	2.000	50.80	21
18	18-60	1.1250	28.575	2.3125	58.738	0.942	23.93	1.875	47.63	1.400	35.56	0.030	0.76	2.188	55.58	20
20	20-60	1.2500	31.750	2.5000	63.500	1.005	25.53	1.875	47.63	1.523	38.68	0.030	0.76	2.375	60.33	21
22	22-68	1.3750	34.925	2.7500	69.850	1.097	27.86	2.125	53.98	1.670	42.42	0.030	0.76	2.625	66.68	22
24	24-72	1.5000	38.100	3.0000	76.200	1.175	29.85	2.250	57.15	1.800	45.72	0.030	0.76	2.875	73.03	21

[1]Chamfered Type only. [2]Grooved Type only. See page 17 for groove dimensions.

LOAD RATINGS

Chamfered 03-508 N		Grooved 03-528 NG		Radial Limit Load Rating[1]		No Load Rational Starting Torque		Weight Approx.	
				lbf.	N	in.-lbs.	N-m	lbs.	kg
03	03-16	03	03-16	4100	18200	.25-5	.03-.56	0.02	0.008
04	04-19	04	04-19	7000	31100	.25-5	.03-.56	0.04	0.016
05	05-20	05	05-20	8800	39100	1-15	.03-.90	0.03	0.013
06	06-26	06	06-26	15700	69800	1-15	.03-.90	0.07	0.031
07	07-28	07	07-28	17700	78700	1-15	.03-.90	0.10	0.043
08	08-30	08	08-30	23400	104100	1-15	.03-.90	0.16	0.072
10	10-38	10	10-38	41400	184200	1-15	.03-.90	0.25	0.111
12	12-41	12	12-41	49900	222000	1-15	.03-.90	0.32	0.143
14	14-45	14	14-45	56000	249100	1-24	.03-1.4	0.43	0.195
16	16-60	16	16-60	91600	407500	1-24	.03-1.4	0.83	0.377
18	18-60	18	18-60	113600	505300	1-24	.03-1.4	1.10	0.497
20	20-60	20	20-60	132300	588500	1-24	.03-1.4	1.32	0.598
22	22-68	22	22-68	160400	713500	1-24	.03-1.4	1.80	0.816
24	24-72	24	24-72	183700	817100	1-24	.03-1.4	2.22	1.008

[1]Load ratings based on AS81820 except limitations due to pin bending.

©2008, 2011, 2016 RBC Bearings Incorporated. All rights reserved.

LIGHT WEIGHT ALUMINUM SELF-LUBRICATED SPHERICAL BEARING, NARROW

- Narrow series, self-lubricated
- Material
  Outer ring: Aluminum alloy, heat-treated
  Inner ring: Aluminum alloy, heat-treated,
  Sphere hard anodized
  Liner: Fibriloid® qualified to AS81820

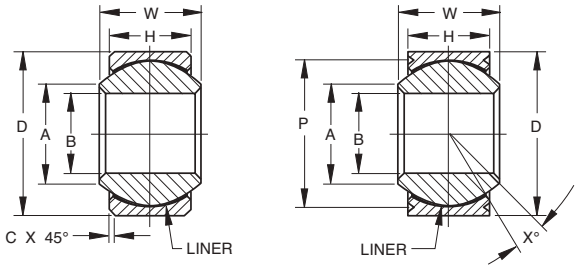

Chamfered Grooved

SPECIFICATIONS AND ORDERING INFORMATION

DIMENSIONS — TOLERANCES

Bearing Number	Bearing Number	B		D		H		W		A		C[1]		P[2] Groove Pitch Diameter		X°
		+.0000, -.0005 +.000, -.013		+.0000, -.0005 +.000, -.013		±.005 ±.13		+.000, -.002 +.00, -.05		Min.		+.010, -.000 +.25, -.00		+.000 in., -.008 in. +.00 mm, -.20mm		Ref.
Chamfered Part Numbers	Grooved Part Numbers	in.	mm	in.	mm	in.	mm	in.	mm	in.	mm	in.	mm	in.	mm	
03-713-03	03-715-03	.1900	4.826	.5625	14.288	.218	5.54	.281	7.14	.293	7.44	.010	.25	.500	12.70	10
03-713-04	03-715-04	.2500	6.350	.6562	16.667	.250	6.35	.343	8.71	.364	9.25	.010	.25	.594	15.09	10
03-713-05	03-715-05	.3125	7.938	.7500	19.050	.281	7.14	.375	9.52	.461	10.64	.010	.25	.660	16.76	10
03-713-06	03-715-06	.3750	9.525	.8125	20.638	.312	7.92	.406	10.31	.475	12.06	.020	.51	.712	18.08	9
03-713-07	03-715-07	.4375	11.112	.9062	23.017	.343	8.71	.437	11.10	.530	13.46	.020	.51	.806	20.47	8
03-713-08	03-715-08	.5000	12.700	1.0000	25.400	.390	9.91	.500	12.70	.600	15.24	.020	.51	.876	22.25	8
03-713-09	03-715-09	.5625	14.288	1.0937	27.780	.437	11.10	.562	14.27	.670	17.02	.020	.51	.970	24.64	8
03-713-10	03-715-10	.6250	15.875	1.1875	30.162	.500	12.70	.625	15.88	.739	18.77	.020	.51	1.063	27.00	8
03-713-12	03-715-12	.7500	19.050	1.4375	36.512	.593	15.06	.750	19.05	.920	23.37	.030	.76	1.313	33.35	8
03-713-14	03-715-14	.8750	22.225	1.5625	39.688	.703	17.86	.875	22.22	.980	24.89	.030	.76	1.438	36.53	8
03-713-16	03-715-16	1.0000	25.400	1.7500	44.450	.797	20.24	1.000	25.40	1.118	28.40	.030	.76	1.626	41.30	9

[1]Chamfered Type only. [2]Grooved Type only. See page 17 for groove dimensions.

LOAD RATINGS

Bearing Number	Bearing Number	Oscillating Radial Load Rating[1]		Radial Limit Load Rating[1]		No Load Rotational Breakaway Torque		Weight Approx.	
		lbs.	N	lbs.	N	in.-lbs.	N-m	lbs.	kg
03-713-03	03-715-03	1500	6700	3050	13600	.25-5	.03-.56	0.005	0.002
03-713-04	03-715-04	2320	10400	4120	18400	.25-5	.03-.56	0.008	0.004
03-713-05	03-715-05	3200	14300	5700	25400	.25-8	.03-.90	0.011	0.005
03-713-06	03-715-06	3800	17000	6780	30200	.25-8	.03-.90	0.014	0.006
03-713-07	03-715-07	4800	21500	8360	37200	.25-8	.03-.90	0.018	0.008
03-713-08	03-715-08	6820	30400	11000	49000	.25-8	.03-.90	0.025	0.011
03-713-09	03-715-09	8800	39200	14100	63000	.25-8	.03-.90	0.033	0.015
03-713-10	03-715-10	10800	48000	18100	80500	.25-8	.03-.90	0.050	0.023
03-713-12	03-715-12	16800	75000	28500	127000	.25-8	.03-.90	0.080	0.036
03-713-14	03-715-14	22000	98000	35400	157500	.25-12	.03-1.4	0.100	0.045
03-713-16	03-715-16	29000	129000	46300	206000	.25-12	.03-1.4	0.140	0.063

[1]Load ratings based on AS81820 with reduction for aluminum materials.

©2008, 2011, 2016 RBC Bearings Incorporated. All rights reserved.

LIGHT WEIGHT ALUMINUM SELF-LUBRICATED SPHERICAL BEARING, WIDE

- Wide series, self-lubricated
- Material
  Outer ring: Aluminum Alloy, Heat-treated
  Inner ring: Aluminum Alloy, Heat-treated, Sphere hard anodized
  Liner: Fibriloid® qualified to AS81820

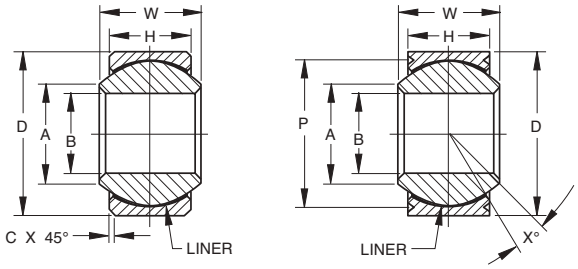

Chamfered Grooved

SPECIFICATIONS AND ORDERING INFORMATION

DIMENSIONS — TOLERANCES

Bearing Number	Bearing Number	B		D		H		W		A		C(1)		P(2) Groove Pitch Diameter		X°
		+.0000, -.0005 +.000, -.013		+.0000, -.0005 +.000, -.013		±.005 ±.13		+.000, -.002 +.00, -.05		Min.		+.010, -.000 +.25, -.00		+.000 in., -.008 in. +.00 mm, -.20mm		Ref.
Chamfered Part Numbers	Grooved Part Numbers	in.	mm	in.	mm	in.	mm	in.	mm	in.	mm	in.	mm	in.	mm	
03-714-03	03-716-03	.1900	4.826	.6250	15.875	.327	8.31	.437	11.10	.300	7.62	.010	.25	.563	14.30	15
03-714-04	03-716-04	.2500	6.350	.6250	15.875	.327	8.31	.437	11.10	.300	7.62	.010	.25	.563	14.30	15
03-714-05	03-716-05	.3125	7.938	.6875	17.462	.317	8.05	.437	11.10	.360	9.14	.010	.25	.625	15.88	14
03-714-06	03-716-06	.3750	9.525	.8125	20.638	.406	10.31	.500	12.70	.466	11.84	.020	.51	.712	18.08	8
03-714-07	03-716-07	.4375	11.112	.9062	23.017	.442	11.23	.562	14.27	.537	13.64	.020	.51	.806	20.47	10
03-714-08	03-716-08	.5000	12.700	1.0000	25.400	.505	12.83	.625	15.88	.607	15.42	.020	.51	.900	22.86	9
03-714-09	03-716-09	.5625	14.288	1.1250	28.575	.536	13.61	.687	17.45	.721	18.31	.020	.51	1.025	26.04	10
03-714-10	03-716-10	.6250	15.875	1.1875	30.162	.567	14.40	.750	19.05	.747	18.97	.020	.51	1.087	27.61	12
03-714-12	03-716-12	.7500	19.050	1.3750	34.925	.630	16.00	.875	22.22	.845	21.46	.030	.76	1.251	31.78	13
03-714-14	03-716-14	.8750	22.225	1.6250	41.275	.755	19.18	.875	22.22	.995	25.27	.030	.76	1.501	38.13	6
03-714-16	03-716-16	1.0000	25.400	2.1250	53.975	1.005	25.53	1.375	34.92	1.263	32.23	.030	.76	2.001	50.83	12

(1)Chamfered Type only. (2)Grooved Type only. See page 17 for groove dimensions.

LOAD RATINGS

Bearing Number	Bearing Number	Oscillating Radial Load Rating(1)		Radial Limit Load Rating(1)		No Load Rotational Breakaway Torque Standard		"K" Type		Weight Approx.	
		lbs.	N	lbs.	N	in.-lbs.	N-m	in.-lbs.	"K" Type	lbs.	kg
03-714-03	03-716-03	3250	14500	5600	25000	.25-5	.03-.56	0-0.5	0-.06	0.010	0.005
03-714-04	03-716-04	3250	14500	5600	25000	.25-5	.03-.56	0-0.5	0-.06	0.010	0.005
03-714-05	03-716-05	3600	16000	6100	27200	.25-8	.03-.90	0-1.0	0-.11	0.010	0.005
03-714-06	03-716-06	5450	24250	10000	44500	.25-8	.03-.90	0-1.0	0-.11	0.020	0.009
03-714-07	03-716-07	7600	34000	12500	55600	.25-8	.03-.90	0-1.0	0-.11	0.030	0.014
03-714-08	03-716-08	10000	44500	16000	71200	.25-8	.03-.90	0-1.0	0-.11	0.030	0.014
03-714-09	03-716-09	12200	54300	19300	85900	.25-8	.03-.90	0-1.0	0-.11	0.050	0.023
03-714-10	03-716-10	13500	60000	23000	102300	.25-8	.03-.90	0-1.0	0-.11	0.060	0.027
03-714-12	03-716-12	18000	80000	30000	133500	.25-8	.03-.90	0-1.0	0-.11	0.080	0.036
03-714-14	03-716-14	23500	104500	40000	178000	.25-12	.03-1.4	0-2.0	0-.23	0.120	0.054
03-714-16	03-716-16	42500	189000	72000	320300	.25-12	.03-1.4	0-2.0	0-.23	0.330	0.149

(1)Load ratings based on AS81820 with reduction for aluminum materials.

©2008, 2011, 2016 RBC Bearings Incorporated. All rights reserved.

HIGH TEMPERATURE SELF-LUBRICATED SPHERICAL BEARING, NARROW

- Narrow series, self-lubricated
- High temperature — low wear
  -65°F to +600°F (-53.9°C to +301°C)
- Material
  Outer ring: CRES A-286 Race
  Inner ring: Cobalt base alloy
  Liner: Fabroid® X

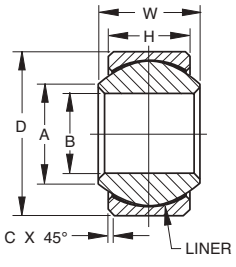

Chamfered

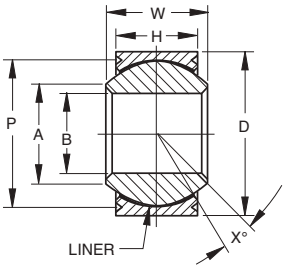

Grooved

SPECIFICATIONS AND ORDERING INFORMATION

DIMENSIONS — TOLERANCES

Bearing Number	Bearing Number	B Ref. +.0000, -.0005 +.000, -.013		D +.0000, -.0005 +.000, -.013		H ±.005 ±.13		W +.000, -.002 +.00, -.05		A Min.		C(1) +.010, -.000 +.25, -.00		P(2) Groove Pitch Diameter +.000 in., -.008 in. +.00 mm, -.20mm		X° Ref.
Chamfered Part Numbers	Grooved Part Numbers	in.	mm	in.	mm	in.	mm	in.	mm	in.	mm	in.	mm	in.	mm	
03-450-03	03-451-03	.1900	4.826	.5625	14.288	.218	5.54	.281	7.14	.293	7.44	.010	.25	.500	12.70	10
03-450-04	03-451-04	.2500	6.350	.6562	16.667	.250	6.35	.343	8.71	.364	9.25	.010	.25	.594	15.09	10
03-450-05	03-451-05	.3125	7.938	.7500	19.050	.281	7.14	.375	9.52	.419	10.64	.010	.25	.660	16.76	10
03-450-06	03-451-06	.3750	9.525	.8125	20.638	.312	7.92	.406	10.31	.475	12.06	.020	.51	.712	18.08	9
03-450-07	03-451-07	.4375	11.112	.9062	23.017	.343	8.71	.437	11.10	.530	13.46	.020	.51	.806	20.47	8
03-450-08	03-451-08	.5000	12.700	1.0000	25.400	.390	9.91	.500	12.70	.600	15.24	.020	.51	.876	22.25	8
03-450-09	03-451-09	.5625	14.288	1.0937	27.780	.437	11.10	.562	14.27	.670	17.02	.020	.51	.970	24.64	8
03-450-10	03-451-10	.625	15.875	1.1875	30.162	.500	12.70	.625	15.88	.739	18.77	.020	.51	1.063	27.00	8
03-450-12	03-451-12	.7500	19.050	1.4375	36.512	.593	15.06	.750	19.05	.920	23.37	.030	.76	1.313	33.35	8
03-450-14	03-451-14	.8750	22.225	1.5625	39.688	.703	17.86	.875	22.22	.980	24.89	.030	.76	1.438	36.53	8
03-450-16	03-451-16	1.0000	25.400	1.7500	44.450	.797	20.24	1.000	25.40	1.118	28.40	.030	.76	1.626	41.30	9

(1)Chamfered Type only. (2)Grooved Type only. See page 17 for groove dimensions.

LOAD RATINGS

Bearing Number	Bearing Number	Oscillating Radial Load Rating(1)		Radial Limit Load Rating(1)		Thrust Limit Load Rating(1)		No Load Rotational Breakaway Torque Standard		"K" Type		Weight Approx.	
Chamfered Part Numbers	Grooved Part Numbers	lbs.	N	lbs.	N	lbs.	N	in.-lbs.	N-m	in.-lbs.	N-m	lbs.	kg
03-450-03	03-451-03	938	4200	2484	11100	94	420	.25-5	.03-.56	0-0.5	0-.06	.02	.010
03-450-04	03-451-04	2075	9200	3775	16800	269	1200	.25-5	.03-.56	0-0.5	0-.06	.02	.010
03-450-05	03-451-05	3413	15200	5469	24400	438	2000	.25-8	.03-.90	0-1	0-.11	.03	.015
03-450-06	03-451-06	4125	18400	6588	29300	688	3100	.25-8	.03-.90	0-1	0-.11	.04	.017
03-450-07	03-451-07	5031	22400	8250	36700	875	3900	.25-8	.03-.90	0-1	0-.11	.05	.023
03-450-08	03-451-08	6500	29000	11188	49800	1313	5800	.25-8	.03-.90	0-1	0-.11	.07	.032
03-450-09	03-451-09	8125	36200	14500	64500	2300	10200	.25-8	.03-.90	0-1	0-.11	.09	.041
03-450-10	03-451-10	10281	45800	19063	84800	2950	13200	.25-8	.03-.90	0-1	0-.11	.12	.056
03-450-12	03-451-12	14750	65600	29000	129000	4219	18800	.25-8	.03-.90	0-1	0-.11	.21	.095
03-450-14	03-451-14	18906	84100	38875	173000	5844	26000	.25-12	.03-1.4	0-2	0-.23	.27	.122
03-450-16	03-451-16	23750	105700	51375	228500	7600	33800	.25-12	.03-1.4	0-2	0-.23	.39	.175

(1)Load ratings based on 62.5% of AS81820 ratings.

Bearing configuration	Part number designations for a 0.2500 in. bore, grooved spherical bearing
Base P/N (no options)	03-451-04
Low breakaway torque	03-451-04K

©2008, 2011, 2016 RBC Bearings Incorporated. All rights reserved.

RBC AEROSPACE BEARINGS

HIGH TEMPERATURE SELF-LUBRICATED SPHERICAL BEARING, WIDE

- Wide series, self-lubricated
- High temperature — low wear
  -65°F to +600°F (-53.9°C to +301°C)
- Material
  Outer ring: CRES A-286 Race
  Inner ring: Cobalt base alloy
  Liner: Fabroid® X

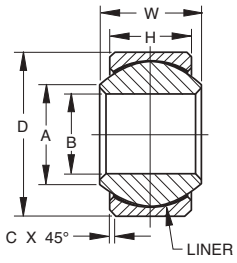

Chamfered

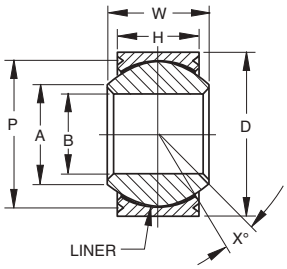

Grooved

SPECIFICATIONS AND ORDERING INFORMATION

DIMENSIONS — TOLERANCES

Bearing Number	Bearing Number	B Ref. +.0000, -.0005 +.000, -.013		D +.0000, -.0005 +.000, -.013		H ±.005 ±.13		W +.000, -.002 +.00, -.05		A Min.		C(1) +.010, -.000 +.25, -.00		P(2) Groove Pitch Diameter +.000 in., -.008 in. +.00 mm, -.20mm		X° Ref.
Chamfered Part Numbers	Grooved Part Numbers	in.	mm	in.	mm	in.	mm	in.	mm	in.	mm	in.	mm	in.	mm	
03-452-03	03-453-03	.1900	4.826	.6250	15.875	.327	8.31	.437	11.10	.300	7.62	.010	0.25	.563	14.30	15
03-452-04	03-453-04	.2500	6.350	.6250	15.875	.327	8.31	.437	11.10	.300	7.62	.010	0.25	.563	14.30	15
03-452-05	03-453-05	.3125	7.938	.6875	17.462	.317	8.05	.437	11.10	.360	9.14	.010	0.25	.625	15.88	14
03-452-06	03-453-06	.3750	9.525	.8125	20.638	.406	10.31	.500	12.70	.466	11.84	.020	0.51	.712	18.08	8
03-452-07	03-453-07	.4375	11.112	.9375	23.812	.442	11.23	.562	14.27	.537	13.64	.020	0.51	.837	21.26	10
03-452-08	03-453-08	.5000	12.700	1.0000	25.400	.505	12.83	.625	15.88	.607	15.42	.020	0.51	.900	22.86	9
03-452-09	03-453-09	.5625	14.288	1.1250	28.575	.536	13.61	.687	17.45	.721	18.31	.020	0.51	1.025	26.04	10
03-452-10	03-453-10	.6250	15.875	1.1875	30.162	.567	14.40	.750	19.05	.747	18.97	.020	0.51	1.087	27.61	12
03-452-12	03-453-12	.7500	19.050	1.3750	34.925	.630	16.00	.875	22.22	.845	21.46	.030	0.76	1.251	31.78	13
03-452-14	03-453-14	.8750	22.225	1.6250	41.275	.755	19.18	.875	22.22	.995	25.27	.030	0.76	1.501	38.13	6
03-452-16	03-453-16	1.0000	25.400	2.1250	53.975	1.005	25.53	1.375	34.92	1.269	32.33	.030	0.76	2.001	50.83	12

(1)Chamfered Type only. (2)Grooved Type only. See page 17 for groove dimensions.

LOAD RATINGS

Bearing Number	Bearing Number	Oscillating Radial Load Rating(1)		Radial Limit Load Rating(1)		Thrust Limit Load Rating(1)		No Load Rotational Breakaway Torque Standard		"K" Type		Weight Approx.	
Chamfered Part Numbers	Grooved Part Numbers	lbs.	N	lbs.	N	lbs.	N	in.-lbs.	N-m	in.-lbs.	N-m	lbs.	kg
03-452-03	03-453-03	3063	13600	1563	7000	1106	5000	.25-5	.03-.56	0-0.5	0-.06	.031	.014
03-452-04	03-453-04	3063	13600	3438	15300	1106	5000	.25-5	.03-.56	0-0.5	0-.06	.031	.014
03-452-05	03-453-05	3781	16800	5875	26100	1025	4600	.25-8	.03-.90	0-1	0-.11	.035	.016
03-452-06	03-453-06	5194	23100	8563	38100	1644	7300	.25-8	.03-.90	0-1	0-.11	.060	.027
03-452-07	03-453-07	7344	32700	12938	57600	2281	10200	.25-8	.03-.90	0-1	0-.11	.080	.036
03-452-08	03-453-08	9344	41600	13375	59500	3106	13800	.25-8	.03-.90	0-1	0-.11	.100	.045
03-452-09	03-453-09	11313	50300	16625	74000	3356	14900	.25-8	.03-.90	0-1	0-.11	.135	.061
03-452-10	03-453-10	12656	56300	18125	80600	3831	17000	.25-8	.03-.90	0-1	0-.11	.160	.072
03-452-12	03-453-12	16375	72900	23125	102900	4831	21500	.25-8	.03-.90	0-1	0-.11	.240	.110
03-452-14	03-453-14	21000	93400	40750	181300	6750	30000	.25-12	.03-1.4	0-2	0-.23	.350	.160
03-452-16	03-453-16	35156	156400	65000	289100	12063	53700	.25-12	.03-1.4	0-2	0-.23	.970	.440

(1)Load ratings based on 62.5% of AS81820 ratings.

Bearing configuration	Part number designations for a 0.2500 in. bore, grooved spherical bearing
Base P/N (no options)	03-453-04
Low breakaway torque	03-453-04K

©2008, 2011, 2016 RBC Bearings Incorporated. All rights reserved.

RBC Loader Slot Bearings

GENERAL FEATURES AND TECHNICAL SPECIFICATIONS

Race

The race is precisely machined to provide maximum race to ball conformity. Race can be furnished with face grooves or chamfers for staking either the race or the housing.

Construction

The loader slot configuration is of metal-to-metal design and may be used in areas where outer ring strength is critical. These bearings provide misalignment and high load carrying capacity, and the ability to remove and replace the spherical ball.

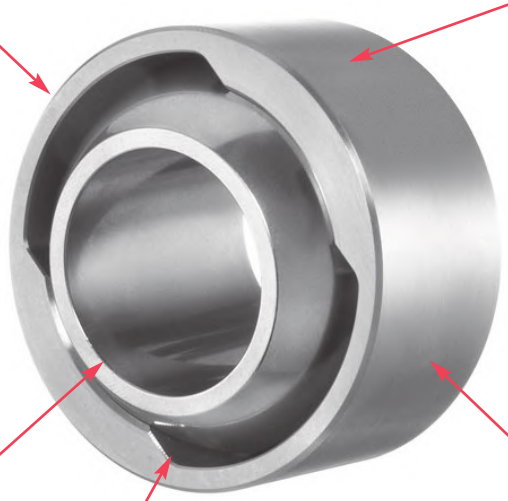

Ball

A fully hardened ball provides strength when clamped in the application. Ball may contain a lubrication groove and holes to accommodate relubrication needs.

Materials

Various materials are used in loader slot bearings. Races: 17-4PH, 15-5PH, Inconel®-718 (high temp applications)

Balls: 440C, 52100 chrome plated, PH13-8Mo, Stellite® 6.

Design Features

Race and ball wear surfaces may also be provided with a dry-film lubricant to reduce friction.

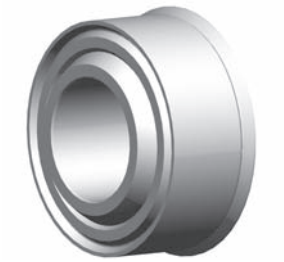

SPHERICAL BEARINGS

Stellite® is a registered trademark of the Deloro Stellite Company, Inc.
Inconel® is a registered trademark of Alloys International, Inc. and The International Nickel Company, Inc.

©2008, 2011, 2016 RBC Bearings Incorporated. All rights reserved.

CORROSION RESISTANT SINGLE V-GROOVE BEARING

- Material
  Ball: Cobalt Alloy per AMS 5387
  37 HRC minimum
  Race: 15-5PH CRES per AMS 5659
  Cond H-1050
- Surface Treatment
  Ball O.D.: Solid film lubricant
  Race Spherical I.D.: Nitrided

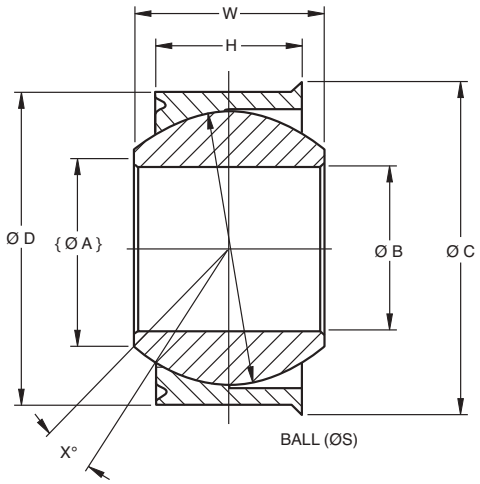

SPECIFICATIONS AND ORDERING INFORMATION

DIMENSIONS — TOLERANCES

LHSSFGTMxx Dash No.	B +.0000, -.0005 +.000, -.013		D +0.0000, -.0005 +0.000, -.013		H +.003, -.003 +0.76, -.0.76		W +.000, -.002 +.000, -.051		C +.002, -.002 +.051, -.051		A Ø Ref.	Ø Ref.	S Ref.	Ref.	X° Ref.
	in.	mm	in.	mm	in.	mm	in.	mm	in.	mm	in.	mm	in.	mm	
03	0.1900	4.826	0.5625	14.288	0.218	5.54	0.281	7.14	0.582	14.78	0.293	7.44	0.4060	10.312	10
04	0.2500	6.350	0.6562	16.667	0.250	6.35	0.343	8.71	0.676	17.17	0.405	10.29	0.5300	13.462	12
05	0.3125	7.938	0.7500	19.050	0.281	7.14	0.375	9.53	0.770	19.56	0.420	10.67	0.5625	14.288	11
06	0.3750	9.525	0.8125	20.638	0.312	7.92	0.406	10.31	0.852	21.64	0.476	12.09	0.6250	15.875	10
07	0.4375	11.113	0.9062	23.017	0.343	8.71	0.437	11.10	0.946	24.03	0.530	13.46	0.6865	17.437	9
08	0.5000	12.700	1.0000	25.400	0.390	9.91	0.500	12.70	1.080	27.43	0.641	16.28	0.8125	20.638	9
09	0.5625	14.288	1.0937	27.780	0.437	11.10	0.562	14.27	1.174	29.82	0.671	17.04	0.8750	22.225	9
10	0.6250	15.875	1.1875	30.163	0.500	12.70	0.625	15.88	1.267	32.18	0.740	18.80	0.9680	24.587	9
12	0.7500	19.050	1.4375	36.513	0.593	15.06	0.750	19.05	1.517	38.53	0.921	23.39	1.1870	30.150	9
14	0.8750	22.225	1.5625	39.688	0.703	17.86	0.875	22.23	1.642	41.71	0.978	24.84	1.3120	33.325	9
16	1.0000	25.400	1.7500	44.450	0.797	20.24	1.000	25.40	1.830	46.48	1.119	28.42	1.5000	38.100	9

.002 inch max internal clearance (contact RBC engineering for reduced clearance design)

LOAD RATINGS

LHSSFGTMxx Dash No.	Static Limit Loads 1/ Radial		Axial	
	lbf.	N	lbf.	N
03	2,256	8257	995	3641
04	3,904	14289	1,160	4245
05	7,136	26119	1,320	4831
06	11,408	41756	1,630	5966
07	16,640	60906	1,810	6625
08	19,040	69691	2,000	7320
09	21,512	78739	2,550	9333
10	23,256	85122	2,770	10138
12	28,168	103101	3,350	12261
14	32,400	118592	3,640	13323
16	37,264	136395	4,080	14933

Static Limit loads are approximate based on pin deflection and slot orientation

©2008, 2011, 2016 RBC Bearings Incorporated. All rights reserved.

CORROSION RESISTANT DOUBLE V-GROOVE BEARING

- Material
  Ball: Cobalt Alloy per AMS 5387
  37 HRC minimum
  Race: 15-5PH CRES per AMS 5659
  Cond H-1050
- Surface Treatment
  Ball O.D.: Solid film lubricant
  Race Spherical I.D.: Nitrided

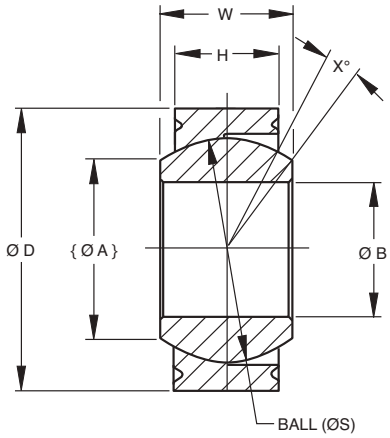

SPECIFICATIONS AND ORDERING INFORMATION

DIMENSIONS — TOLERANCES

LHSSGTMxx Dash No.	B +.0000, -.0005 +.000, -.013		D +0.0000, -.0005 +0.000, -.013		H +.003, -.003 +0.76, -.0.76		W +.000, -.002 +.000, -.051		A Ø Ref.	Ø Ref.	S Ref.	Ref.	X° Ref.
	in.	mm	in.	mm	in.	mm	in.	mm	in.	mm	in.	mm	
03	0.1900	4.826	0.5625	14.288	0.218	5.54	0.281	7.14	0.293	7.44	0.4060	10.312	10
04	0.2500	6.350	0.6562	16.667	0.250	6.35	0.343	8.71	0.405	10.29	0.5300	13.462	12
05	0.3125	7.938	0.7500	19.050	0.281	7.14	0.375	9.53	0.420	10.67	0.5625	14.288	11
06	0.3750	9.525	0.8125	20.638	0.312	7.92	0.406	10.31	0.476	12.09	0.6250	15.875	10
07	0.4375	11.113	0.9062	23.017	0.343	8.71	0.437	11.10	0.530	13.46	0.6865	17.437	9
08	0.5000	12.700	1.0000	25.400	0.390	9.91	0.500	12.70	0.641	16.28	0.8125	20.638	9
09	0.5625	14.288	1.0937	27.780	0.437	11.10	0.562	14.27	0.671	17.04	0.8750	22.225	9
10	0.6250	15.875	1.1875	30.163	0.500	12.70	0.625	15.88	0.740	18.80	0.9680	24.587	9
12	0.7500	19.050	1.4375	36.513	0.593	15.06	0.750	19.05	0.921	23.39	1.1870	30.150	9
14	0.8750	22.225	1.5625	39.688	0.703	17.86	0.875	22.23	0.978	24.84	1.3120	33.325	9
16	1.0000	25.400	1.7500	44.450	0.797	20.24	1.000	25.40	1.119	28.42	1.5000	38.100	9

.002 inch max internal clearance (contact RBC engineering for reduced clearance design)

LOAD RATINGS

LHSSGTMxx Dash No.	Static Limit Loads 1/ Radial		Axial	
	lbf.	N	lbf.	N
03	2,256	8257	995	3641
04	3,904	14289	1,160	4245
05	7,136	26119	1,320	4831
06	11,408	41756	1,630	5966
07	16,640	60906	1,810	6625
08	19,040	69691	2,000	7320
09	21,512	78739	2,550	9333
10	23,256	85122	2,770	10138
12	28,168	103101	3,350	12261
14	32,400	118592	3,640	13323
16	37,264	136395	4,080	14933

Static Limit loads are approximate based on pin deflection and slot orientation

©2008, 2011, 2016 RBC Bearings Incorporated. All rights reserved.

RBC Split Ball Bearings

GENERAL FEATURES AND TECHNICAL SPECIFICATIONS

Race

The race is precisely machined to provide maximum ball to race conformity like a loader slot, but without the loss of load carrying area caused by machining the loader slot. The race can be furnished with face grooves, chamfers, flanges, or threads for retention in the housing. The race can be manufactured from a variety of alloys such as steel, aluminum, or titanium. Lubricant can be grease, dry-film, or PTFE liner.

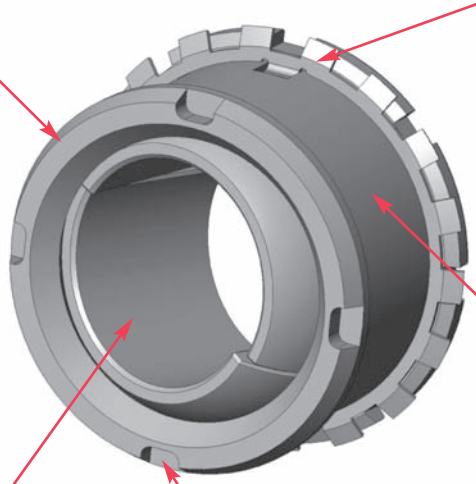

Construction

The split ball is replaceable when it wears out. In unclamped applications, most wear is limited to the ball bore, allowing the race to be reused in certain applications.

Materials

Various materials are use. Races: 17-4PH, 15-5PH, Inconel® 718, aluminum (requires PTFE liner or hard coat), titanium (requires PTFE liner or hard coat).

Balls: Copper alloys, titanium, aluminum, 440C, PH13-8Mo, 15-5PH, 17-4PH, cobalt alloys.

Ball

The ball is split and designed around a “zero gap.” The ball is typically a softer material, such as copper alloy or bronze, for grease lubricated applications. For PTFE lined, the ball may be hardened or have a hard coating applied to the sphere. Split ball bearings are best used in unclamped applications, where the pin/bolt is free to rotate in the ball bore. Clamped bore applications require special considerations/designs.

Design

Usually grease lubricated, steel race, copper alloy ball. Titanium hard coated race, grease lube, or copper ball also possible. All titanium component construction is possible. Self-lubricating PTFE liners are also an option.

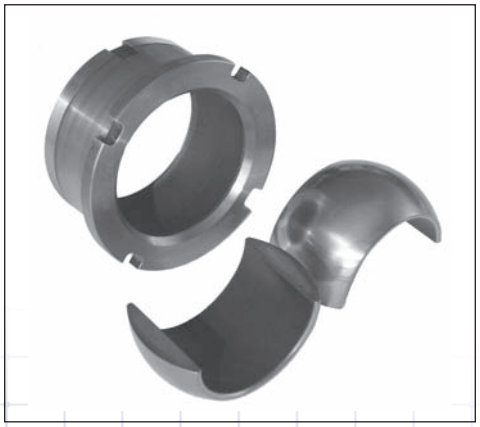

Inconel® is a registered trademark of Alloys International, Inc. and The international Nickel Company, Inc.

©2008, 2011, 2016 RBC Bearings Incorporated. All rights reserved.

RBC Rod End Bearings

SELF-LUBRICATING

AS81935/(1,2,4,5) Alloy Steel, External/Internal Threaded Series

M81935/1 External Threads, Wide Series 50
M81935/2 Internal Threads, Wide Series 51
M81935/4 External Threads, Narrow Series 52
M81935/5 Internal Threads, Narrow Series 53

AS81935/(6,7,8,9) CRES, External/Internal Threaded Series

M81935/6 External Threads, Wide, High Capacity Series 54
M81935/7 Internal Threads, Wide, High Capacity Series 55
M81935/8 External Threads, Narrow, Light Capacity Series. 56
M81935/9 Internal Threads, Narrow, Light Capacity Series 57

External/Internal Threaded/17-4PH; CRES 440C Series

External Threads, Wide Series 58
Internal Threads, Wide Series 59
External Threads, Narrow Series 60
Internal Threads, Narrow Series 61

EN Standard Series

EN6056 Metric, CRES, External Threaded Series 62

CRES METAL-TO-METAL EXTERNAL/INTERNAL THREADED SERIES

CRES, Metal-to-Metal, External Threaded Series 63
CRES, Metal-to-Metal, Internal Threaded Series 64

High Misalignment

Self-Lubricating External/Internal Threaded Wide Series

High Misalignment, Self-Lubricated, External Threaded Series 65
High Misalignment, Self-Lubricated, Internal Threaded Series 66

Metal-to-Metal External/Internal Threaded Wide Series

High Misalignment, Metal-to-Metal, External Threaded Series 67
High Misalignment, Metal-to-Metal, Internal Threaded Series. 68

High Temperature Self-Lubricating External/Internal Threaded Series

High Temperature, External Threaded Series 69
High Temperature, Internal Threaded Series 70
Loader Slot Rod End Feature Page 71
External Threaded Load Slot Series 72

GENERAL FEATURES AND TECHNICAL SPECIFICATIONS

Rod End Body

The rod end body is designed to provide high strength and ductility. Common materials for the body are: 4340 cad plated, 17-4PH, 15-5PH, titanium, Inconel®l 718, aluminum, and others.

Design Features

The thread may be lubricated with various dry film lubricants or cadmium plated to provide lubricity during installation. Male/female and keyway options are available.

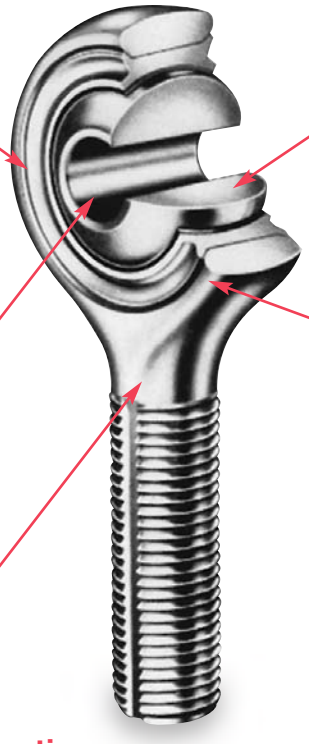

Materials

Insert bearing may be 17-4PH, 15-5PH, 440C, 52100 chrome plated, Inconel® 718, Cobalt, Aluminum, Beryllium Copper, PH13-8Mo.

Bearing Insert/Cartridge

The insert provides the rod end with high misalignment and load carrying capacity. The insert may be metal-to-metal or self-lubricating design. Lubrication fittings are available for metal-to-metal design.

Construction

These bearing assemblies incorporate a spherical bearing swaged into the rod end body.

Inconel® is a registered trademark of Alloys International, Inc. and The International Nickel Company, Inc.

©2008, 2011, 2016 RBC Bearings Incorporated. All rights reserved.

RBC AEROSPACE BEARINGS

M81935/1 SELF-LUBRICATED ROD END BEARING

AS81935/1 • AS81935 (formerly MIL-B-81935)

- Male type, rod end
- High temperature — low wear
  -65°F to +325°F (-53.9°C to +162.8°C)
- Material: Bearing inner ring: CRES 440C
  Bearing outer ring: CRES 17-4PH
  Rod end housing: AISI 4340 steel heat treated to 180,000 psi min. tensile strength. Exposed surface of rod end housing cadmium plated
- Liner: Fibriloid® or "E" Uniflon® qualified to AS81820
- Rolled threads conform to UNJF-3A per AS8879
  For rod ends with left hand thread add "L" or "1" depending on part number ordered. Example: see below
- For rod ends with slotted shank or "keyway" add "K" or "1"
  Example: see below

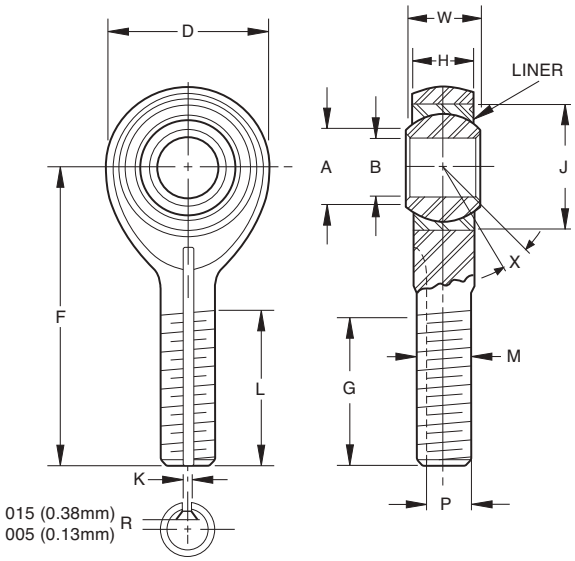

SPECIFICATIONS AND ORDERING INFORMATION

DIMENSIONS — TOLERANCES

PART NUMBERS MT Dash No.	01-824 Dash No.	M81935/1 Dash No.	B +0.000, -.0005 +0.00, -.013 in.	B mm	D ±.010 ±.25 in.	D mm	L ±.031 ±.79 in.	L mm	F ±.010 ±.25 in.	F mm	W +.000, -.002 +.00, -.05 in.	W mm	H ±.005 ±.13 in.	H mm	A Min. in.	A mm	J Max. in.	J mm	G +.000, -.020 +.00, -.51 in.	G mm	K(1) +.005, -.000 +.13, -.00 in.	K(1) mm	P(1) +.000, -.005 +.00, -.13 in.	P(1) mm	M UNJF-3A PER AS8879	X° Min.
3	-03	-3	.1900	4.826	.806	20.47	.968	24.59	1.562	39.67	.437	11.10	.337	8.56	.30	7.6	.6250	15.875	.980	24.89	.062	1.57	.268	6.81	5/16-24	15
4	-04	-4	.2500	6.350	.806	20.47	.968	24.59	1.562	39.67	.437	11.10	.337	8.56	.30	7.6	.6250	15.875	.980	24.89	.062	1.57	.268	6.81	5/16-24	15
5	-05	-5	.3125	7.938	.900	22.86	1.187	30.15	1.875	47.62	.437	11.10	.327	8.31	.36	9.1	.6875	17.462	1.270	32.26	.062	1.57	.268	6.81	5/16-24	14
6	-06	-6	.3750	9.525	1.025	26.04	1.187	30.15	1.938	49.23	.500	12.70	.416	10.57	.47	11.9	.8125	20.638	1.235	31.37	.093	2.36	.319	8.10	3/8-24	8
7	-07	-7	.4375	11.112	1.150	29.21	1.281	32.54	2.125	53.98	.562	14.27	.452	11.48	.54	13.7	.9062	23.017	1.402	35.61	.093	2.36	.383	9.73	7/16-20	10
8	-08	-8	.5000	12.700	1.337	33.96	1.468	37.29	2.438	61.93	.625	15.88	.515	13.08	.61	15.5	1.0000	25.400	1.589	40.36	.093	2.36	.445	11.30	1/2-20	9
10	-10	-0	.6250	15.875	1.525	38.74	1.562	39.67	2.625	66.68	.750	19.05	.577	14.66	.75	19.1	1.1875	30.162	1.683	42.75	.125	3.18	.541	13.74	5/8-18	12
12	-12	-2	.7500	19.050	1.775	45.08	1.687	42.85	2.875	73.02	.875	22.22	.640	16.26	.85	21.6	1.3750	34.925	1.808	45.92	.125	3.18	.663	16.84	3/4-16	13
14	-14	-4	.8750	22.225	2.025	51.44	2.000	50.80	3.375	85.72	.875	22.22	.765	19.43	1.061	26.95	1.6250	41.275	2.121	53.87	.156	3.96	.777	19.74	7/8-14	6
16	-16	-6	1.0000	25.400	2.775	70.48	2.343	59.51	4.125	104.78	1.375	34.92	1.015	25.78	1.27	32.3	2.1250	53.975	2.464	62.59	.187	4.75	1.136	28.85	1 1/4-12	12

(1)Keyway when specified, is compatible with locking devices, AS81935/3 for sizes 3 thru 8, and NAS559 for sizes 10 thru 16.

Keyway tolerances not specified shall be in accordance with AS81935/3 or NAS513 as applicable.

LOAD RATINGS

MT Dash No.	01-824 Dash No.	Ultimate Static Load lbf.	Ultimate Static Load N	Fatigue Load lbf.	Fatigue Load N	Axial Proof Load lbf.	Axial Proof Load N	Weight Max. lbs.	Weight Max. kg	No Load Rotational Breakaway Torque Min. in.-lbs.	Min. Nm	Max. in.-lbs.	Max. Nm
3	-03	2360	10400	1470(1)	6550(2)	1000	4400	0.072	0.033	.5	.06	6	.68
4	-04	4860	21600	2380	10600	1000	4400	0.072	0.033	.5	.06	6	.68
5	-05	7180	32000	2770(3)	12200(3)	1100	4900	0.087	0.039	1	.11	15	1.70
6	-06	8550	38000	3570	16000	1660	7350	0.136	0.062	1	.11	15	1.70
7	-07	12000	53000	4800	21200	1850	8300	0.183	0.083	1	.11	15	1.70
8	-08	19500	86500	7680(3)	34000(3)	2040	9000	0.278	0.126	1	.11	15	1.70
10	-10	21900	98000	9180	40500	2430	10800	0.424	0.192	1	.11	15	1.70
12	-12	29300	129000	11600	52000	2810	12500	0.639	0.290	1	.11	15	1.70
14	-14	34500	153000	13100	58500	3320	14600	0.963	0.437	1	.11	24	2.71
16	-16	80300	355000	30400	134000	4340	19300	2.546	1.150	1	.11	24	2.71

(1)Based on bolt bending fatigue strength 180000 psi

(2)Based on bolt bending fatigue strength 127kg/mm^2.

(3)Shank limitation

Notes: For liner specifications or the following options:
- Stainless steel rod end body
- High temperature or high speed liners

Please see engineering section or contact RBC Aerospace Bearings.

Bearing configuration	Part number designations for a 0.2500 in. bore rod end		
Base P/N (no options)	MT4	01-824-04	M81935/1-4
Keyway on threads	MTK4	01-824-041	M81935/1-4K
Left hand thread	MTL4	11-824-04	M81935/1-4L

©2008, 2011, 2016 RBC Bearings Incorporated. All rights reserved.

M81935/2 SELF-LUBRICATED ROD END BEARING

AS81935/2 • AS81935 (formerly MIL-B-81935)

- Female type, rod end
- High temperature — low wear
  -65°F to +325°F (-53.9°C to +162.8°C)
- Material: Bearing inner ring: CRES 440C
  Bearing outer ring: CRES 17-4PH
  Rod end housing: AISI 4340 steel heat treated to 180,000 psi min. tensile strength. Exposed surface of rod end housing cadmium plated
- Liner: Fibriloid® or "E" Uniflon® qualified to AS81820
- Threads conform to UNJF-3B per AS8879. For left hand thread add "L" or "1" depending on part number ordered
  Example: see below
- For rod end with keyway in end of shank add "K" or "1" Example: see below
- For rod end with deep key slot on base add "W" Example: see below

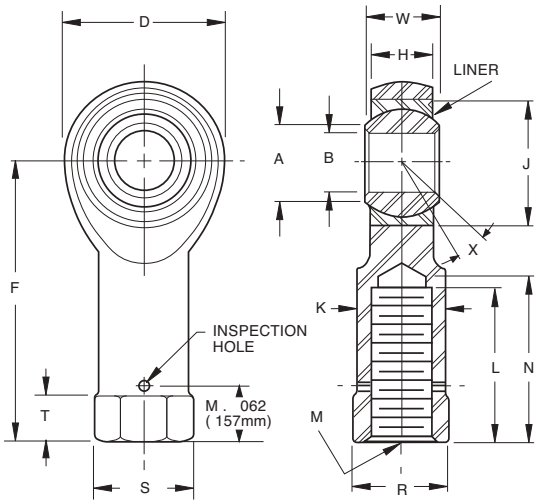

SPECIFICATIONS AND ORDERING INFORMATION

DIMENSIONS — TOLERANCES

PART NUMBERS FT Dash No.	02-824 Dash No.	M81935/2 Dash No.	B +0.000, -.0005 +0.00, -.013	D ±.010 ±.25	L(1) Min.	F ±.010 ±.25	K ±.010 ±.25	W +.000, -.002 +.00, -.05	H ±.005 ±.13	A Min.	J Max.	N Max.	S(2) Ref.	T +.010, -.062 +.25, -1.57	R(1) +.002, -.010 +.05, -.25	M UNJF-3B PER AS8879	X° Min.
			in. mm	in. mm	in. mm	in. mm	in. mm	in. mm	in. mm	in. mm	in. mm	in. mm	in. mm	in. mm	in. mm		
3	-03	-3	.1900 4.826	.806 20.47	.750 19.05	1.375 34.92	.422 10.72	.437 11.10	.337 8.56	.30 7.6	.6250 15.875	.875 22.22	.500 12.70	.188 4.78	.437 11.10	$^5/_{16}$-24	15
4	-04	-4	.2500 6.350	.806 20.47	.750 19.05	1.469 37.31	.422 10.72	.437 11.10	.337 8.56	.30 7.6	.6250 15.875	.875 22.22	.500 12.70	.188 4.78	.437 11.10	$^5/_{16}$-24	15
5	-05	-5	.3125 7.938	.900 22.86	.875 22.22	1.625 41.28	.485 12.32	.437 11.10	.327 8.31	.36 9.1	.6875 17.462	1.000 25.40	.580 14.73	.250 6.35	.500 12.70	$^3/_8$-24	14
6	-06	-6	.3750 9.525	1.025 26.04	1.000 25.40	1.812 46.02	.547 13.89	.500 12.70	.416 10.57	.47 11.9	.8125 20.638	1.125 28.58	.660 16.76	.250 6.35	.562 14.27	$^3/_{18}$-24	8
7	-07	-7	.4375 11.112	1.150 29.21	1.125 28.58	2.000 50.80	.610 15.49	.562 14.27	.452 11.48	.54 13.7	.9062 23.017	1.250 31.75	.720 18.29	.250 6.35	.625 15.88	$^7/_{16}$-20	10
8	-08	-8	.5000 12.700	1.337 33.96	1.250 31.75	2.250 57.15	.735 18.67	.625 15.88	.515 13.08	.61 15.5	1.0000 25.400	1.375 34.92	.880 22.35	.250 6.35	.750 19.05	$^1/_2$-20	9
10	-10	-10	.6250 15.875	1.525 38.74	1.375 34.92	2.500 63.50	.860 21.84	.750 19.05	.577 14.66	.75 19.1	1.1875 30.162	1.500 38.10	1.020 25.91	.375 9.52	.875 22.22	$^5/_8$-18	12
12	-12	-12	.7500 19.050	1.775 45.09	1.625 41.28	2.875 73.03	.985 25.02	.875 22.23	.640 16.26	.85 21.6	1.3750 34.925	1.750 44.45	1.160 29.46	.375 9.53	1.000 25.40	$^3/_4$ - 16	13
14	-14	-14	.8750 22.225	2.025 51.44	1.875 47.63	3.375 85.73	1.110 28.19	.875 22.23	.765 19.43	1.00 25.4	1.6250 41.275	2.062 52.37	1.300 33.02	.500 12.70	1.125 28.58	$^7/_8$ - 14	6
16	-16	-16	1.0000 25.400	2.775 70.49	2.125 53.98	4.125 104.78	1.688 42.88	1.375 34.93	1.015 25.78	1.27 32.3	2.1250 53.975	2.312 58.72	2.020 51.31	.563 14.30	1.750 44.45	$1^1/_4$ - 12	12

(1)Completed thread.
(2)Measured across corners or diameter.

LOAD RATINGS

FT Dash No.	02-824 Dash No.	Ultimate Static Load lbf.	Ultimate Static Load N	Fatigue Load lbf.	Fatigue Load N	Axial Proof Load lbf.	Axial Proof Load N	Weight Max. lbs.	Weight Max. kg	No Load Rotational Breakaway Torque Min. in.-lbs.	Min. Nm	Max. in.-lbs.	Max. Nm
3	-03	2360	10400	1470(1)	6550(2)	1000	4400	0.080	0.030	.5	.06	6	.68
4	-04	4860	21600	2380	10600	1000	4400	0.084	0.038	.5	.06	6	.68
5	-05	7180	32000	3020	13400	1100	4900	0.102	0.046	1	.11	15	1.70
6	-06	8550	38000	3570	16000	1660	7350	0.161	0.073	1	.11	15	1.70
7	-07	12000	53000	4800	21200	1850	8300	0.212	0.096	1	.11	15	1.70
8	-08	19500	86500	8260	36500	2040	9000	0.325	0.147	1	.11	15	1.70
10	-10	21900	98000	9180	40500	2430	10800	0.481	0.218	1	.11	15	1.70
12	-12	29300	130000	11600	51500	1810	12500	0.673	0.306	1	.11	15	1.70
14	-14	34500	151000	13100	58000	1320	14800	0.959	0.436	1	.11	24	2.71
16	-16	80300	357000	30400	135000	4340	19300	2.717	1.235	1	.11	24	2.71

Notes:

Ultimate Static Load — No fracture of rod ending housing or bearing will occur when the ultimate static load is applied in the bearing along the shank center line.

Axial Static Proof Load — Is the retention strength of the bearing within the eye of the rod end housing. No push out of the bearing cartridge will occur when the housing eye is supported and the axial proof load is applied to the face of insert bearing inner ring.

Fatigue Load — The rod end housing will withstand 50,000 cycles of full tension to 10% tension loading at speeds up to 2800 cpm. Load is applied in line with the rod end shank putting the eye in tension.

(1)Based on bolt bending fatigue strength 180000 psi
(2)Based on bolt bending fatigue strength 127kg/mm^2.

Check for availability.

Bearing configuration	Part number designations for a 0.2500 in. bore rod end		
Base P/N (no options)	FT4	02-824-04	M81935/2-4
Keyway on threads	FTK4	02-824-041	M81935/2-4K
Left hand thread	FTL4	12-824-04	M81935/2-4L
Deep key slot on base	FTW4	02-824-04W	M81935/2-4W

©2008, 2011, 2016 RBC Bearings Incorporated. All rights reserved.

RBC AEROSPACE BEARINGS

M81935/4 SELF-LUBRICATED ROD END BEARING

AS81935/4 • AS81935 (formerly MIL-B-81935)

- Male type, rod end
- High temperature — low wear
  -65°F to +325°F (-53.9°C to +162.8°C)
- Material: Bearing inner ring: CRES 440C
  Bearing outer ring: CRES 17-4PH
  Rod end housing: AISI 4340 steel heat treated to 180,000 psi min. tensile strength. Exposed surface of rod end housing cadmium plated
- Liner: Fibriloid® or "E" Uniflon® qualified to AS81820
- Rolled threads conform to UNJF-3A per AS8879
  For rod ends with left hand thread add "L" or "1" depending on part number ordered. Example: see below
- For rod ends with slotted shank or "keyway" add "K" or "1" Example: see below

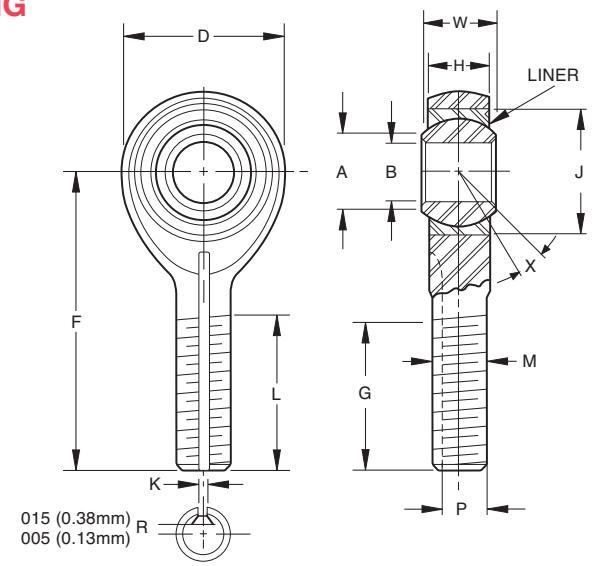

SPECIFICATIONS AND ORDERING INFORMATION

DIMENSIONS — TOLERANCES

PART NUMBERS ME-AN Dash No.	PART NUMBERS M81935/4 Dash No.	B		D		L		F		W		H		A		J		G		K(1)		P(1)		M	X°
		+0.000, -.0005 +0.00, -.013		±.010 ±.25		±.031 ±.79		±.010 ±.25		+.000, -.002 +.00, -.05		±.005 ±.13		Min.		Max.		+.000, -.020 +.00, -.51		+.005, -.000 +.13, -.00		+.000, -.005 +.00, -.13		UNJF-3A PER AS8879	Min.
		in.	mm	in.	mm	in.	mm	in.	mm	in.	mm	in.	mm	in.	mm	in.	mm	in.	mm	in.	mm	in.	mm		
3	-3	.1900	4.826	.680	17.27	.775	19.69	1.315	33.40	.281	7.14	.228	5.79	.293	7.44	.6250	15.875	.896	22.76	.062	1.57	.207	5.26	1/4-28	10
4	-4	.2500	6.350	.827	21.01	.775	19.69	1.443	36.65	.343	8.71	.260	6.60	.364	9.25	.6250	15.875	.896	22.76	.062	1.57	.207	5.26	1/4-28	10
5	-5	.3125	7.938	.984	24.99	1.187	30.15	1.948	49.48	.375	9.53	.291	7.39	.419	10.64	.6875	17.462	1.308	33.22	.062	1.57	.268	6.81	5/16-24	10
6	-6	.3750	9.525	1.131	28.73	1.187	30.15	2.030	51.56	.406	10.31	.322	8.18	.475	12.07	.8125	20.638	1.308	33.22	.093	2.36	.319	8.10	3/8-24	9
7	-7	.4375	11.112	1.294	32.87	1.281	32.54	2.250	57.15	.437	11.10	.353	8.97	.530	13.46	.9062	23.017	1.402	35.61	.093	2.36	.383	9.73	7/16-20	8
8	-8	.5000	12.700	1.459	37.06	1.462	37.13	2.544	64.62	.500	12.70	.400	10.16	.600	15.24	1.0000	25.400	1.589	40.36	.093	2.36	.445	11.30	1/2-20	8
10	-10	.6250	15.875	1.763	44.78	1.582	40.18	2.832	71.93	.625	15.88	.510	12.95	.739	18.77	1.1875	30.162	1.683	42.75	.125	3.18	.541	13.74	5/8-18	8
12	-12	.7500	19.050	2.140	54.36	1.687	42.85	3.193	81.10	.750	19.05	.603	15.32	.920	23.37	1.3750	34.925	1.808	45.92	.125	3.18	.663	16.84	3/4-16	8
14	-14	.8750	22.225	2.372	60.25	2.000	50.80	3.677	93.40	.875	22.23	.713	18.11	.980	24.89	1.6250	41.275	2.121	53.87	.156	3.96	.777	19.74	7/8-14	8
16	-16	1.0000	25.400	2.681	68.10	2.100	53.34	3.988	101.30	1.000	25.40	.807	20.50	1.118	28.40	2.1250	53.975	2.221	56.41	.156	3.96	.900	22.86	1-12	9

(1)Keyway when specified, is compatible with locking devices, AS81935/3 for sizes 3 thru 8, and NAS559 for sizes 10 thru 16.
Keyway tolerances not specified shall be in accordance with AS81935/3 or NAS513 as applicable.

LOAD RATINGS

PART NUMBERS ME-AN Dash No.	PART NUMBERS M81935/4 Dash No.	Ultimate Static Radial Load		Fatigue Load		Axial Proof Load		Approx. Weight		No Load Rotational Breakaway Torque Min.		Max.	
		lbf.	N	lbf.	N	lbf.	N	lbs.	kg	in.-lbs.	Nm	in.-lbs.	Nm
3	-3	3000	13320	1100	4884	150	666	0.038	0.017	0.5	0.06	6	0.68
4	-4	5300	23532	1500	6660	430	1909	0.045	0.020	0.5	0.06	6	0.68
5	-5	8600	38184	2400	10656	700	3108	0.081	0.037	1	0.11	15	1.70
6	-6	13000	57720	3600	15984	1100	4884	0.120	0.055	1	0.11	15	1.70
7	-7	17800	79032	5000	22200	1400	6216	0.172	0.078	1	0.11	15	1.70
8	-8	24200	107448	6800	30192	2040	9058	0.254	0.115	1	0.11	15	1.70
10	-10	38500	170940	10800	47952	2430	10789	0.455	0.207	1	0.11	15	1.70
12	-12	56600	251304	16000	71040	2940	13054	0.774	0.352	1	0.11	15	1.70
14	-14	77400	343656	21900	97236	3190	14164	1.141	0.519	1	0.11	24	2.71
16	-16	101400	450216	28600	126984	3570	15851	1.646	0.748	1	0.11	24	2.71

(1)Based on bolt bending fatigue strength 180000 psi
(2)Based on bolt bending fatigue strength 127kg/mm^2.
(3)Shank limitation

Notes: For liner specifications or the following options:
- Stainless steel rod end body
- High temperature or high speed liners

Please see engineering section or contact RBC Aerospace Bearings.

Bearing configuration	Part number designations for a 0.2500 in. bore rod end	
Base P/N (no options)	ME4AN	M81935/4-4
Keyway on threads	MEK4AN	M81935/4-4K
Left hand thread	MEL4AN	M81935/4-4L

©2008, 2011, 2016 RBC Bearings Incorporated. All rights reserved.

M81935/5 SELF-LUBRICATED ROD END BEARING

AS81935/5 • AS81935 (formerly MIL-B-81935)

- Female type, rod end
- High temperature — low wear
  -65°F to +325°F (-53.9°C to +162.8°C)
- Material: Bearing inner ring: CRES 440C
  Bearing outer ring: CRES 17-4PH
  Rod end housing: AISI 4340 steel heat treated to 180,000 psi min. tensile strength. Exposed surface of rod end housing cadmium plated
- Liner: Fibriloid® or "E" Uniflon® qualified to AS81820
- Threads conform to UNJF-3B per AS8879. For left hand thread add "L" or "1" depending on part number ordered. Example: see below
- For rod end with keyway in end of shank add "K" or "1" Example: see below
- For rod end with deep key slot on base add "W" Example: see below

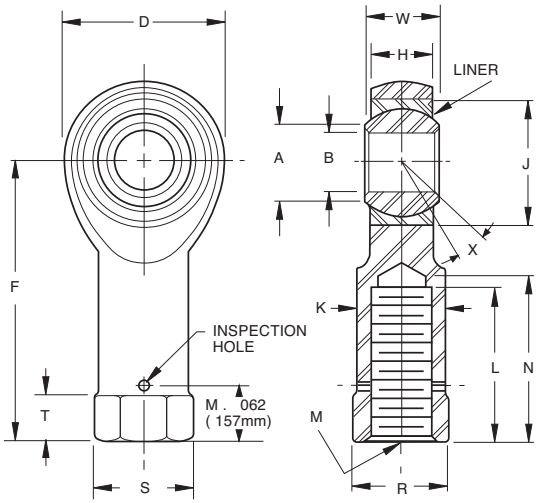

SPECIFICATIONS AND ORDERING INFORMATION

DIMENSIONS — TOLERANCES

PART NUMBERS FE-AN Dash No.	M81935/5 Dash No.	B +0.000, -.0005 +0.00, -.013 in.	B mm	D ±.010 ±.25 in.	D mm	L(1) Min. in.	L mm	F ±.010 ±.25 in.	F mm	K ±.010 ±.25 in.	K mm	W +.000, -.002 +.00, -.05 in.	W mm	H ±.005 ±.13 in.	H mm	A Min. in.	A mm	J Max. in.	J mm	N Max. in.	N mm	S(2) Ref. in.	S mm	T +.010, -.062 +.25, -1.57 in.	T mm	R(1) +.002, -.010 +.05, -.25 in.	R mm	M UNJF-3B PER AS8879	X° Min.
3	-3	.1900	4.826	0.680	17.27	0.625	15.88	1.210	30.73	.329	8.36	.281	7.14	0.228	5.79	0.293	7.44	.5625	14.29	.750	19.05	.430	10.92	.188	4.78	.375	9.53	1/4-28	10
4	-4	.2500	6.350	0.827	21.01	0.625	15.88	1.338	33.99	.329	8.36	.343	8.71	0.260	6.60	0.364	9.25	.6562	16.67	.750	19.05	.430	10.92	.188	4.78	.375	9.53	1/4-28	10
5	-5	.3125	7.938	0.984	24.99	0.750	19.05	1.566	39.78	.413	10.49	.375	9.53	0.291	7.39	0.419	10.64	.7500	19.05	.875	22.23	.500	12.70	.188	4.78	.437	11.10	5/16-24	10
6	-6	.3750	9.525	1.131	28.73	1.000	25.40	1.908	48.46	.501	12.73	.406	10.31	0.322	8.18	0.475	12.07	.8125	20.64	1.125	28.58	.720	18.29	.250	6.35	.625	15.88	3/8-24	9
7	-7	.4375	11.113	1.294	32.87	1.125	28.58	2.125	53.98	.584	14.83	.437	11.10	0.353	8.97	0.530	13.46	.9062	23.02	1.250	31.75	.720	18.29	.250	6.35	.625	15.88	7/16-20	8
8	-8	.5000	12.700	1.459	37.06	1.250	31.75	2.356	59.84	.672	17.07	.500	12.70	0.400	10.16	0.600	15.24	1.0000	25.40	1.375	34.93	1.020	25.91	.375	9.53	0.875	22.23	1/2-20	8
10	-10	.6250	15.875	1.763	44.78	1.375	34.93	2.707	68.76	.845	21.46	.625	15.88	0.510	12.95	0.739	18.77	1.1875	30.16	1.500	38.10	1.020	25.91	.375	9.53	0.875	22.23	5/8-18	8
12	-12	.7500	19.050	2.140	54.36	1.625	41.28	3.193	81.10	1.017	25.83	.750	19.05	0.603	15.32	0.920	23.37	1.4375	36.51	1.750	44.45	1.300	33.02	.500	12.70	1.125	28.58	3/4-16	8
14	-14	.8750	22.225	2.372	60.25	1.875	47.63	3.677	93.40	1.187	30.15	.875	22.23	0.713	18.11	0.980	24.89	1.5625	39.69	2.062	52.37	1.375	34.93	.500	12.70	1.250	31.75	7/8-14	8
16	-16	1.0000	25.400	2.681	68.10	2.125	53.98	4.101	104.17	1.356	34.44	1.000	25.40	0.807	20.50	1.118	28.40	1.7500	44.45	2.312	58.72	1.590	40.39	.500	12.70	1.375	34.93	1-12	9

(1)Completed thread.
(2)Measured across corners or diameter.

LOAD RATINGS

PART NUMBERS FE-AN Dash No.	M81935/5 Dash No.	Ultimate Static Radial Load lbf.	N	Fatigue Load lbf.	N	Axial Proof Load lbf.	N	Approx. Weight lbs.	kg	No Load Rotational Breakaway Torque Min. in.-lbs.	Nm	Max. in.-lbs.	Nm
3	-3	3000	13320	1100	4884	150	666	0.044	0.020	0.5	0.06	6	0.68
4	-4	5500	24420	1300	5772	430	1909	0.052	0.024	0.5	0.06	6	0.68
5	-5	8900	39516	2000	8880	700	1108	0.087	0.040	1	0.11	15	1.70
6	-6	13400	59496	3100	11764	1100	4884	0.137	0.062	1	0.11	15	1.70
7	-7	18200	80808	4200	18648	1400	6216	0.193	0.088	1	0.11	15	1.70
8	-8	24600	109224	5700	25308	1040	9058	0.279	0.127	1	0.11	15	1.70
10	-10	39500	175380	9200	40848	1430	10789	0.504	0.229	1	0.11	15	1.70
12	-12	57200	253968	11500	59940	1940	11054	0.860	0.391	1	0.11	15	1.70
14	-14	77800	345432	18400	81696	1190	14164	1.266	0.575	1	0.11	24	2.71
16	-16	101000	448440	24000	106560	1570	15851	1.814	0.825	1	0.11	24	2.71

(1)Based on bolt bending fatigue strength 180000 psi
(2)Based on bolt bending fatigue strength 127kg/mm^2.
(3)Shank limitation

Notes: For liner specifications or the following options:
- Stainless steel rod end body
- High temperature or high speed liners

Please see engineering section or contact RBC Aerospace Bearings.

Bearing configuration	Part number designations for a 0.2500 in. bore rod end	
Base P/N (no options)	FE4AN	M81935/5-4
Keyway on threads	FEK4AN	M81935/5-4K
Left hand thread	FEL4AN	M81935/5-4L
Deep key slot on base	FEW4AN	M81935/5-4W

©2008, 2011, 2016 RBC Bearings Incorporated. All rights reserved.

RBC AEROSPACE BEARINGS

M81935/6 SELF-LUBRICATED ROD END BEARING

AS81935/6 • AS81935 (formerly MIL-B-81935)

- Male type, rod end
- High temperature — low wear
  -65°F to +325°F (-53.9°C to +162.8°C)
- Material: Bearing inner ring: CRES PH13-8Mo, HRC 43-47
  Bearing outer ring: CRES 17-4PH
  Rod end housing: CRES PH13-8Mo, HRC 40-44, passivated
- Liner: Fibriloid® or "E" Uniflon® qualified to AS81820
- Rolled threads conform to UNJF-3A per AS8879
  For rod ends with left hand thread add "L" or "1"
  depending on part number ordered. Example: see below
- For rod ends with slotted shank or "keyway" add "K" or "1"
  Example: see below

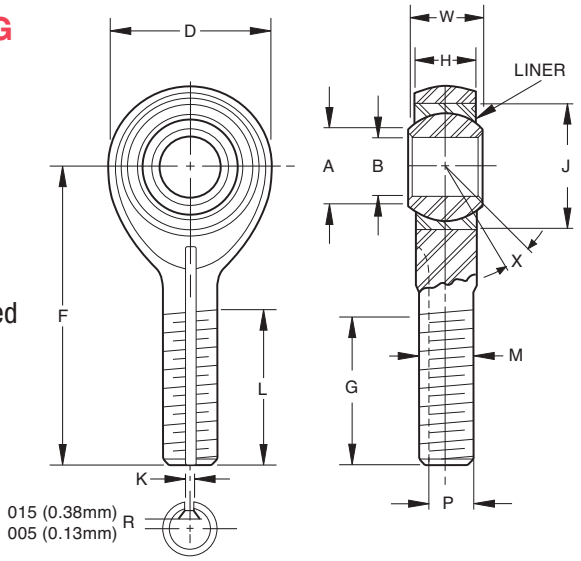

SPECIFICATIONS AND ORDERING INFORMATION

DIMENSIONS — TOLERANCES

PART NUMBERS MPHE Dash No.	01-820 Dash No.	M81935/6 Dash No.	B +0.000, -.0005 +0.00, -.013 in.	B mm	D ±.010 ±.25 in.	D mm	L ±.031 ±.79 in.	L mm	F ±.010 ±.25 in.	F mm	W +.000, -.002 +.00, -.05 in.	W mm	H ±.005 ±.13 in.	H mm	A Min. in.	A mm	J Max. in.	J mm	G +.000, -.020 +.00, -.51 in.	G mm	K(1) +.005, -.000 +.13, -.00 in.	K mm	P(1) +.000, -.005 +.00, -.13 in.	P mm	M UNJF-3A PER AS8879	X° Min.
03	-03	-03	.1900	4.826	.806	20.47	.968	24.59	1.562	39.67	.437	11.10	.337	8.56	.30	7.6	.6250	15.875	.980	24.89	.062	1.57	.268	6.81	5/16-24	15
04	-04	-04	.2500	6.350	.806	20.47	.968	24.59	1.562	39.67	.437	11.10	.337	8.56	.30	7.6	.6250	15.875	.980	24.89	.062	1.57	.268	6.81	5/16-24	15
05	-05	-05	.3125	7.938	.900	22.86	1.187	30.15	1.875	47.62	.437	11.10	.327	8.31	.36	9.1	.6875	17.462	1.270	32.26	.062	1.57	.268	6.81	5/16-24	14
06	-06	-06	.3750	9.525	1.025	26.04	1.187	30.15	1.938	49.23	.500	12.70	.416	10.57	.47	11.9	.8125	20.638	1.235	31.37	.093	2.36	.319	8.10	3/8-24	8
07	-07	-07	.4375	11.112	1.150	29.21	1.281	32.54	2.125	53.98	.562	14.27	.452	11.48	.54	13.7	.9062	23.017	1.402	35.61	.093	2.36	.383	9.73	7/16-20	10
08	-08	-08	.5000	12.700	1.337	33.96	1.468	37.29	2.438	61.93	.625	15.88	.515	13.08	.61	15.5	1.0000	25.400	1.589	40.36	.093	2.36	.445	11.30	1/2-20	9
10	-10	-10	.6250	15.875	1.525	38.74	1.562	39.67	2.625	66.68	.750	19.05	.577	14.66	.75	19.1	1.1875	30.162	1.683	42.75	.125	3.18	.541	13.74	5/8-18	12
12	-12	-12	.7500	19.050	1.775	45.08	1.687	42.85	2.875	73.02	.875	22.22	.640	16.26	.85	21.6	1.3750	34.925	1.808	45.92	.125	3.18	.663	16.84	3/4-16	13
14	-14	-14	.8750	22.225	2.025	51.44	2.000	50.80	3.375	85.72	.875	22.22	.765	19.43	1.061	26.95	1.6250	41.275	2.121	53.87	.156	3.96	.777	19.74	7/8-14	6
16	-16	-16	1.0000	25.400	2.775	70.48	2.343	59.51	4.125	104.78	1.375	34.92	1.015	25.78	1.27	32.3	2.1250	53.975	2.464	62.59	.187	4.75	1.136	28.85	1 1/4-12	12

(1)Keyway when specified, is compatible with locking devices, AS81935/3 for sizes 3 thru 8, and NAS559 for sizes 10 thru 16.

Keyway tolerances not specified shall be in accordance with AS81935/3 or NAS513 as applicable.

LOAD RATINGS

MPHE Dash No.	01-820 Dash No.	Ultimate Static Load lbf.	Ultimate Static Load N	Fatigue Load lbf.	Fatigue Load N	Axial Proof Load lbf.	Axial Proof Load N	Weight Max. lbs.	Weight Max. kg	No Load Rotational Breakaway Torque Min. in.-lbs.	Min. Nm	Max. in.-lbs.	Max. Nm
03	-03	2360	10400	1470(1)	6550(2)	1000	4400	0.072	0.033	.5	.06	6	.68
04	-04	4860	21600	2380	10600	1000	4400	0.072	0.033	.5	.06	6	.68
05	-05	7180	32000	2770(3)	12200(3)	1100	4900	0.087	0.039	1	.11	15	1.70
06	-06	8550	38000	3570	16000	1660	7350	0.136	0.062	1	.11	15	1.70
07	-07	12000	53000	4800	21200	1850	8300	0.183	0.083	1	.11	15	1.70
08	-08	19500	86500	7680(3)	34000(3)	2040	9000	0.278	0.126	1	.11	15	1.70
10	-10	21900	98000	9180	40500	2430	10800	0.424	0.192	1	.11	15	1.70
12	-12	29300	129000	11600	52000	2810	12500	0.639	0.290	1	.11	15	1.70
14	-14	34500	153000	13100	58500	3320	14600	0.963	0.437	1	.11	24	2.71
16	-16	80300	355000	30400	134000	4340	19300	2.546	1.150	1	.11	24	2.71

(1)Based on bolt bending fatigue strength 180000 psi

(2)Based on bolt bending fatigue strength 127kg/mm^2.

(3)Shank limitation

Notes: For liner specifications or the following options:
- Stainless steel rod end body
- High temperature or high speed liners

Please see engineering section or contact RBC Aerospace Bearings.

Bearing configuration	Part number designations for a 0.2500 in. bore rod end		
Base P/N (no options)	MPHE04	01-820-04	M81935/6-04
Keyway on threads	MPHEK04	01-820-041	M81935/6-04K
Left hand thread	MPHEL04	11-820-04	M81935/6-04L

©2008, 2011, 2016 RBC Bearings Incorporated. All rights reserved.

M81935/7 SELF-LUBRICATED ROD END BEARING

AS81935/7 • AS81935 (formerly MIL-B-81935)

- Female type, rod end
- High temperature — low wear
  -65°F to +325°F (-53.9°C to +162.8°C)
- Material: Bearing inner ring: CRES PH13-8Mo, HRC 43-47
  Bearing outer ring: CRES 17-4PH
  Rod end housing: CRES PH13-8Mo, HRC 40-44, passivated
- Liner: Fibriloid® or "E" Uniflon® qualified to AS81820
- Threads conform to UNJF-3B per AS8879. For left hand thread add "L" or "1" depending on part number ordered
  Example: see below
- For rod end with keyway in end of shank add "K" or "1"
  Example: see below
- For rod end with deep key slot on base add "W" Example: see below

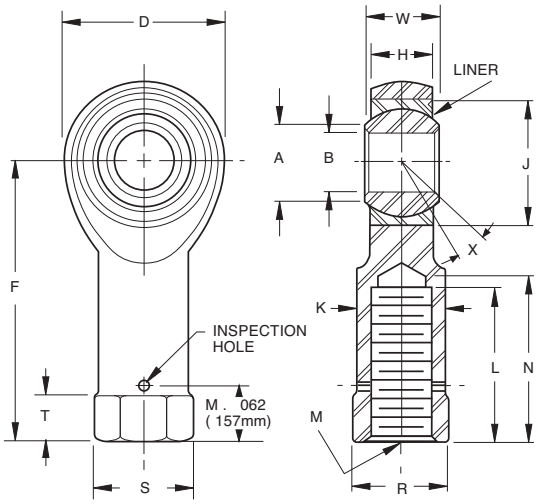

SPECIFICATIONS AND ORDERING INFORMATION

DIMENSIONS — TOLERANCES

PART NUMBERS FPHE Dash No.	02-820 Dash No.	M81935/7 Dash No.	B +0.000, -.0005 +0.00, -.013	D ±.010 ±.25	L(1) Min.	F ±.010 ±.25	K ±.010 ±.25	W +.000, -.002 +.00, -.05	H ±.005 ±.13	A Min.	J Max.	N Max.	S(2) Ref.	T +.010, -.062 +.25, -1.57	R(1) +.002, -.010 +.05, -.25	M UNJF-3B PER AS8879	X° Min.
			in. mm	in. mm	in. mm	in. mm	in. mm	in. mm	in. mm	in. mm	in. mm	in. mm	in. mm	in. mm	in. mm		
03	-03	-03	.1900 4.826	.806 20.47	.750 19.05	1.375 34.92	.422 10.72	.437 11.10	.337 8.56	.30 7.6	.6250 15.875	.875 22.22	.500 12.70	.188 4.78	.437 11.10	$^5/_{16}$-24	15
04	-04	-04	.2500 6.350	.806 20.47	.750 19.05	1.469 37.31	.422 10.72	.437 11.10	.337 8.56	.30 7.6	.6250 15.875	.875 22.22	.500 12.70	.188 4.78	.437 11.10	$^5/_{16}$-24	15
05	-05	-05	.3125 7.938	.900 22.86	.875 22.22	1.625 41.28	.485 12.32	.437 11.10	.327 8.31	.36 9.1	.6875 17.462	1.000 25.40	.580 14.73	.250 6.35	.500 12.70	$^3/_8$-24	14
06	-06	-06	.3750 9.525	1.025 26.04	1.000 25.40	1.812 46.02	.547 13.89	.500 12.70	.416 10.57	.47 11.9	.8125 20.638	1.125 28.58	.660 16.76	.250 6.35	.562 14.27	$^3/_{18}$-24	8
07	-07	-07	.4375 11.112	1.150 29.21	1.125 28.58	2.000 50.80	.610 15.49	.562 14.27	.452 11.48	.54 13.7	.9062 23.017	1.250 31.75	.720 18.29	.250 6.35	.625 15.88	$^7/_{16}$-20	10
08	-08	-08	.5000 12.700	1.337 33.96	1.250 31.75	2.250 57.15	.735 18.67	.625 15.88	.515 13.08	.61 15.5	1.0000 25.400	1.375 34.92	.880 22.35	.250 6.35	.750 19.05	$^1/_2$-20	9
10	-10	-10	.6250 15.875	1.525 38.74	1.375 34.92	2.500 63.50	.860 21.84	.750 19.05	.577 14.66	.75 19.1	1.1875 30.162	1.500 38.10	1.020 25.91	.375 9.52	.875 22.22	$^5/_8$-18	12
12	-12	-12	.7500 19.050	1.775 45.09	1.625 41.28	2.875 73.03	.985 25.02	.875 22.23	.640 16.26	0.85 21.6	1.3750 34.925	1.750 44.45	1.160 29.46	.375 9.53	1.000 25.40	$^3/_4$ - 16	13
14	-14	-14	.8750 22.225	2.025 51.44	1.875 47.63	3.375 85.73	1.110 28.19	.875 22.23	.765 19.43	1.00 25.4	1.6250 41.275	2.062 52.37	1.300 33.02	.500 12.70	1.125 28.58	$^7/_8$ - 14	6
16	-16	-16	1.0000 25.400	2.775 70.49	2.125 53.98	4.125 104.78	1.688 42.88	1.375 34.93	1.015 25.78	1.27 32.3	2.1250 53.975	2.312 58.72	2.020 51.31	.563 14.30	1.750 44.45	$1^1/_4$ - 12	12

(1)Completed thread.
(2)Measured across corners or diameter.

LOAD RATINGS

FPHE Dash No.	02-820 Dash No.	Ultimate Static Load lbf.	Ultimate Static Load N	Fatigue Load lbf.	Fatigue Load N	Axial Proof Load lbf.	Axial Proof Load N	Weight Max. lbs.	Weight Max. kg	No Load Rotational Breakaway Torque Min. in.-lbs.	Min. Nm	Max. in.-lbs.	Max. Nm
03	-03	2360	10400	1470(1)	6550(2)	1000	4400	0.080	0.030	.5	.06	6	.68
04	-04	4860	21600	2380	10600	1000	4400	0.084	0.038	.5	.06	6	.68
05	-05	7180	32000	3020	13400	1100	4900	0.102	0.046	1	.11	15	1.70
06	-06	8550	38000	3570	16000	1660	7350	0.161	0.073	1	.11	15	1.70
07	-07	12000	53000	4800	21200	1850	8300	0.212	0.096	1	.11	15	1.70
08	-08	19500	86500	8260	36500	2040	9000	0.325	0.147	1	.11	15	1.70
10	-10	21900	98000	9180	40500	2430	10800	0.481	0.218	1	.11	15	1.70
12	-12	29300	130000	11600	51500	1810	11500	0.673	0.306	1	.11	15	1.70
14	-14	34500	151000	11100	58000	1320	14800	0.959	0.436	1	.11	24	2.71
16	-16	80300	357000	30400	135000	4340	19300	2.717	1.235	1	.11	24	2.71

Notes:

Ultimate Static Load — No fracture of rod ending housing or bearing will occur when the ultimate static load is applied in the bearing along th shank center line.

Axial Static Proof Load — Is the retention strength of the bearing within the eye of the rod end housing. No push out of the bearing cartridge will occur when the housing eye is supported and the axial proof load is applied to the face of insert bearing inner ring.

Fatigue Load — The rod end housing will withstand 50,000 cycles of full tension to 10% tension loading at speeds up to 2800 cpm. Load is applied in line with the rod end shank putting the eye in tension.

(1)Based on bolt bending fatigue strength 180000 psi
(2)Based on bolt bending fatigue strength 127kg/mm^2.

Check for availability.

Bearing configuration	Part number designations for a 0.2500 in. bore rod end		
Base P/N (no options)	FPHE04	02-820-04	M81935/7-04
Keyway on threads	FPHEK04	02-820-041	M81935/7-04K
Left hand thread	FPHEL04	12-820-04	M81935/7-04L
Deep key slot on base	FPHWE04	02-820-04W	M81935/7-04W

ROD END BEARINGS

©2008, 2011, 2016 RBC Bearings Incorporated. All rights reserved.

M81935/8 SELF-LUBRICATED ROD END BEARING

AS81935/8 • AS81935 (formerly MIL-B-81935)

- Male type, rod end
- High temperature — low wear
  -65°F to +325°F (-53.9°C to +162.8°C)
- Material: Bearing inner ring: CRES PH13-8Mo, HRC 43-47
  Bearing outer ring: CRES 17-4PH
  Rod end housing: CRES PH13-8Mo, HRC 40-44, passivated
- Liner: Fibriloid® or "E" Uniflon® qualified to AS81820
- Rolled threads conform to UNJF-3A per AS8879
  For rod ends with left hand thread add "L" or "1" depending on part number ordered. Example: see below
- For rod ends with slotted shank or "keyway" add "K" or "1" Example: see below

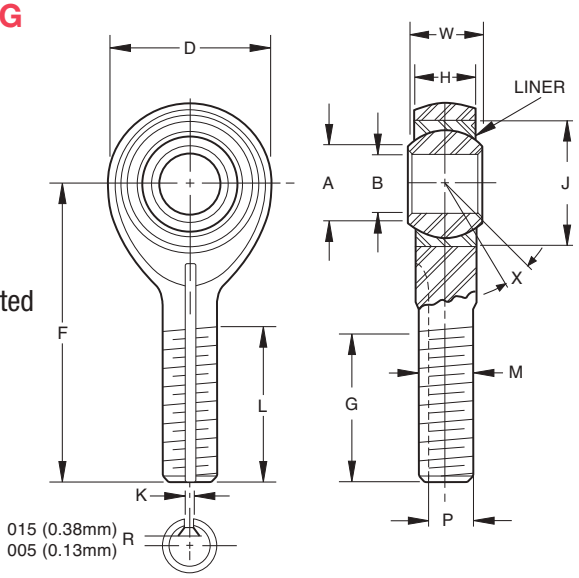

SPECIFICATIONS AND ORDERING INFORMATION

DIMENSIONS — TOLERANCES

PART NUMBERS MPHE-AN Dash No.	M81935/8 Dash No.	B +0.000, -.0005 +0.00, -.013		D ±.010 ±.25		L ±.031 ±.79		F ±.010 ±.25		W +.000, -.002 +.00, -.05		H ±.005 ±.13		A Min.		J Max.		G +.000, -.020 +.00, -.51		K(1) +.005, -.000 +.13, -.00		P(1) +.000, -.005 +.00, -.13		M UNJF-3A PER AS8879	X° Min.
		in.	mm	in.	mm	in.	mm	in.	mm	in.	mm	in.	mm	in.	mm	in.	mm	in.	mm	in.	mm	in.	mm		
03	-03	.1900	4.826	.680	17.27	.775	19.69	1.315	33.40	.281	7.14	.228	5.79	.293	7.44	.6250	15.875	.896	22.76	.062	1.57	.207	5.26	1/4-28	10
04	-04	.2500	6.350	.827	21.01	.775	19.69	1.443	36.65	.343	8.71	.260	6.60	.364	9.25	.6250	15.875	.896	22.76	.062	1.57	.207	5.26	1/4-28	10
05	-05	.3125	7.938	.984	24.99	1.187	30.15	1.948	49.48	.375	9.53	.291	7.39	.419	10.64	.6875	17.462	1.308	33.22	.062	1.57	.268	6.81	5/16-24	10
06	-06	.3750	9.525	1.131	28.73	1.187	30.15	2.030	51.56	.406	10.31	.322	8.18	.475	12.07	.8125	20.638	1.308	33.22	.093	2.36	.319	8.10	3/8-24	9
07	-07	.4375	11.112	1.294	32.87	1.281	32.54	2.250	57.15	.437	11.10	.353	8.97	.530	13.46	.9062	23.017	1.402	35.61	.093	2.36	.383	9.73	7/16-20	8
08	-08	.5000	12.700	1.459	37.06	1.462	37.13	2.544	64.62	.500	12.70	.400	10.16	.600	15.24	1.0000	25.400	1.589	40.36	.093	2.36	.445	11.30	1/2-20	8
10	-10	.6250	15.875	1.763	44.78	1.582	40.18	2.832	71.93	.625	15.88	.510	12.95	.739	18.77	1.1875	30.162	1.683	42.75	.125	3.18	.541	13.74	5/8-18	8
12	-12	.7500	19.050	2.140	54.36	1.687	42.85	3.193	81.10	.750	19.05	.603	15.32	.920	23.37	1.3750	34.925	1.808	45.92	.125	3.18	.663	16.84	3/4-16	8
14	-14	.8750	22.225	2.372	60.25	2.000	50.80	3.677	93.40	.875	22.23	.713	18.11	.980	24.89	1.6250	41.275	2.121	53.87	.156	3.96	.777	19.74	7/8-14	8
16	-16	1.0000	25.400	2.681	68.10	2.100	53.34	3.988	101.30	1.000	25.40	.807	20.50	1.118	28.40	2.1250	53.975	2.221	56.41	.156	3.96	.900	22.86	1-12	9

(1)Keyway when specified, is compatible with locking devices, AS81935/3 for sizes 3 thru 8, and NAS559 for sizes 10 thru 16.
Keyway tolerances not specified shall be in accordance with AS81935/3 or NAS513 as applicable.

LOAD RATINGS

PART NUMBERS MPHE-AN Dash No.	M81935/8 Dash No.	Ultimate Static Radial Load		Fatigue Load		Axial Proof Load		Approx. Weight		No Load Rotational Breakaway Torque Min.		Max.	
		lbf.	N	lbf.	N	lbf.	N	lbs.	kg	in.-lbs.	Nm	in.-lbs.	Nm
03	-03	1000	11320	1100	4884	150	666	0.038	0.017	0.5	0.06	6	0.68
04	-04	5300	21532	1500	6660	430	1909	0.045	0.020	0.5	0.06	6	0.68
05	-05	8600	38184	1400	10656	700	1108	0.081	0.037	1	0.11	15	1.70
06	-06	11000	57720	1600	15984	1100	4884	0.120	0.055	1	0.11	15	1.70
07	-07	17800	79032	5000	21200	1400	6216	0.172	0.078	1	0.11	15	1.70
08	-08	24200	107448	6800	30192	1040	9058	0.254	0.115	1	0.11	15	1.70
10	-10	38500	170940	10800	47952	1430	10789	0.455	0.207	1	0.11	15	1.70
12	-12	56600	251304	16000	71040	1940	11054	0.774	0.352	1	0.11	15	1.70
14	-14	77400	341656	21900	97236	1190	14164	1.141	0.519	1	0.11	24	2.71
16	-16	101400	450216	28600	126984	1570	15851	1.646	0.748	1	0.11	24	2.71

(1)Based on bolt bending fatigue strength 180000 psi
(2)Based on bolt bending fatigue strength 127kg/mm^2.
(3)Shank limitation

Notes: For liner specifications or the following options:
- Stainless steel rod end body
- High temperature or high speed liners

Please see engineering section or contact RBC Aerospace Bearings.

Bearing configuration	Part number designations for a 0.2500 in. bore rod end	
Base P/N (no options)	MPHE04AN	M81935/8-04
Keyway on threads	MPHEK04AN	M81935/8-04K
Left hand thread	MPHEL04AN	M81935/8-04L

©2008, 2011, 2016 RBC Bearings Incorporated. All rights reserved.

M81935/9 SELF-LUBRICATED ROD END BEARING

AS81935/9 • AS81935 (formerly MIL-B-81935)

- Female type, rod end
- High temperature — low wear
  -65°F to +325°F (-53.9°C to +162.8°C)
- Material: Bearing inner ring: CRES PH13-8Mo, HRC 43-47
  Bearing outer ring: CRES 17-4PH
  Rod end housing: CRES PH13-8Mo, HRC 40-44, passivated
- Liner: Fibriloid® or "E" Uniflon® qualified to AS81820
- Threads conform to UNJF-3B per AS8879. For left hand thread add "L" or "1" depending on part number ordered
  Example: see below
- For rod end with keyway in end of shank add "K" or "1"
  Example: see below
- For rod end with deep key slot on base add "W" Example: see below

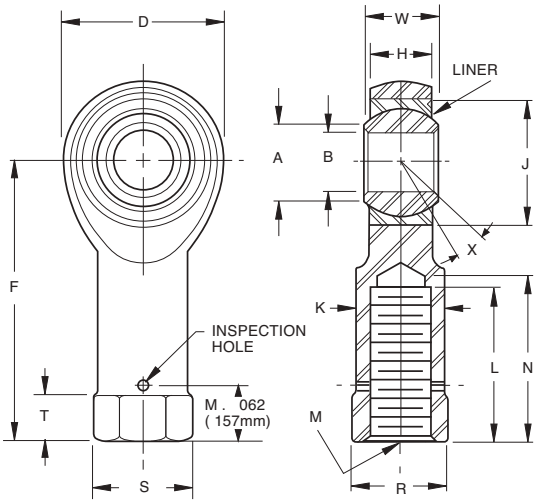

SPECIFICATIONS AND ORDERING INFORMATION

DIMENSIONS — TOLERANCES

PART NUMBERS FPHE-AN Dash No.	PART NUMBERS M81935/9 Dash No.	B +0.000, -.0005 +0.00, -.013	D ±.010 ±.25	L(1) Min.	F ±.010 ±.25	K ±.010 ±.25	W +.000, -.002 +.00, -.05	H ±.005 ±.13	A Min.	J Max.	N Max.	S(2) Ref.	T +.010, -.062 +.25, -1.57	R(1) +.002, -.010 +.05, -.25	M UNJF-3B PER AS8879	X° Min.
		in. mm	in. mm	in. mm	in. mm	in. mm	in. mm	in. mm	in. mm	in. mm	in. mm	in. mm	in. mm	in. mm		
03	-03	.1900 4.826	.680 17.27	.625 15.88	1.210 30.73	.329 8.36	.281 7.14	.228 5.79	.293 7.44	.5625 14.29	.750 19.05	.430 10.92	.188 4.78	.375 9.53	1/4-28	10
04	-04	.2500 6.350	.827 21.01	.625 15.88	1.338 33.99	.329 8.36	.343 8.71	.260 6.60	.364 9.25	.6562 16.67	.750 19.05	.430 10.92	.188 4.78	.375 9.53	1/4-28	10
05	-05	.3125 7.938	.984 24.99	.750 19.05	1.566 39.78	.413 10.49	.375 9.53	.291 7.39	.419 10.64	.7500 19.05	.875 22.23	.500 12.70	.188 4.78	.437 11.10	5/16-24	10
06	-06	.3750 9.525	1.131 28.73	1.000 25.40	1.908 48.46	.501 12.73	.406 10.31	.322 8.18	.475 12.07	.8125 20.64	1.125 28.58	.720 18.29	.250 6.35	.625 15.88	3/8-24	9
07	-07	.4375 11.113	1.294 32.87	1.125 28.58	2.125 53.98	.584 14.83	.437 11.10	.353 8.97	.530 13.46	.9062 23.02	1.250 31.75	.720 18.29	.250 6.35	.625 15.88	7/16-20	8
08	-08	.5000 12.700	1.459 37.06	1.250 31.75	2.356 59.84	.672 17.07	.500 12.70	.400 10.16	.600 15.24	1.0000 25.40	1.375 34.93	1.020 25.91	.375 9.53	.875 22.23	1/2-20	8
10	-10	.6250 15.875	1.763 44.78	1.375 34.93	2.707 68.76	.845 21.46	.625 15.88	.510 12.95	.739 18.77	1.1875 30.16	1.500 38.10	1.020 25.91	.375 9.53	.875 22.23	5/8-18	8
12	-12	.7500 19.050	2.140 54.36	1.625 41.28	3.193 81.10	1.017 25.83	.750 19.05	.603 15.32	.920 23.37	1.4375 36.51	1.750 44.45	1.300 33.02	.500 12.70	1.125 28.58	3/4-16	8
14	-14	.8750 22.225	2.372 60.25	1.875 47.63	3.677 93.40	1.187 30.15	.875 22.23	.713 18.11	.980 24.89	1.5625 39.69	2.062 52.37	1.375 34.93	.500 12.70	1.250 31.75	7/8-14	8
16	-16	1.0000 25.400	2.681 68.10	2.125 53.98	4.101 104.17	1.356 34.44	1.000 25.40	.807 20.50	1.118 28.40	1.7500 44.45	2.312 58.72	1.590 40.39	.500 12.70	1.375 34.93	1-12	9

(1)Completed thread.
(2)Measured across corners or diameter.

LOAD RATINGS

PART NUMBERS FPHE-AN Dash No.	PART NUMBERS M81935/9 Dash No.	Ultimate Static Radial Load lbf.	Ultimate Static Radial Load N	Fatigue Load lbf.	Fatigue Load N	Axial Proof Load lbf.	Axial Proof Load N	Approx. Weight lbs.	Approx. Weight kg	No Load Rotational Breakaway Torque Min. in.-lbs.	Min. Nm	Max. in.-lbs.	Max. Nm
03	-03	1000	11320	1100	4884	150	666	0.044	0.020	0.5	0.06	6	0.68
04	-04	5500	24420	1300	5772	430	1909	0.052	0.024	0.5	0.06	6	0.68
05	-05	8900	39516	1000	8880	700	1108	0.087	0.040	1	0.11	15	1.70
06	-06	11400	59496	1100	11764	1100	4884	0.137	0.062	1	0.11	15	1.70
07	-07	18200	80808	4200	18648	1400	6216	0.193	0.088	1	0.11	15	1.70
08	-08	24600	109224	5700	25308	1040	9058	0.279	0.127	1	0.11	15	1.70
10	-10	39500	175380	9200	40848	1430	10789	0.504	0.229	1	0.11	15	1.70
12	-12	57200	251968	11500	59940	1940	11054	0.860	0.391	1	0.11	15	1.70
14	-14	77800	345432	18400	81696	1190	14164	1.266	0.575	1	0.11	24	2.71
16	-16	101000	448440	24000	106560	1570	15851	1.814	0.825	1	0.11	24	2.71

(1)Based on bolt bending fatigue strength 180000 psi
(2)Based on bolt bending fatigue strength 127kg/mm^2.
(3)Shank limitation

Notes: For liner specifications or the following options:
- Stainless steel rod end body
- High temperature or high speed liners

Please see engineering section or contact RBC Aerospace Bearings.

Bearing configuration	Part number designations for a 0.2500 in. bore rod end	
Base P/N (no options)	FPHE04AN	M81935/9-04
Keyway on threads	FPHEK04AN	M81935/9-04K
Left hand thread	FPHEL04AN	M81935/9-04L
Deep key slot on base	FPHEW04AN	M81935/9-04W

©2008, 2011, 2016 RBC Bearings Incorporated. All rights reserved.

SELF-LUBRICATED ROD END BEARING

- Male type, rod end
- High temperature — low wear
  -65°F to +325°F (-53.9°C to +162.8°C)
- Material: Bearing inner ring: CRES 440C
  Bearing outer ring: CRES 17-4PH
  Rod end housing: CRES 17-4PH, HRC 39-42, passivated
- Liner: Fibriloid® or "E" Uniflon® qualified to AS81820
- Rolled threads conform to UNJF-3A per AS8879
  For rod ends with left hand thread add "L" or "1"
  depending on part number ordered. Example: see below
- For rod ends with slotted shank or "keyway" add "K" or "1"
  Example: see below

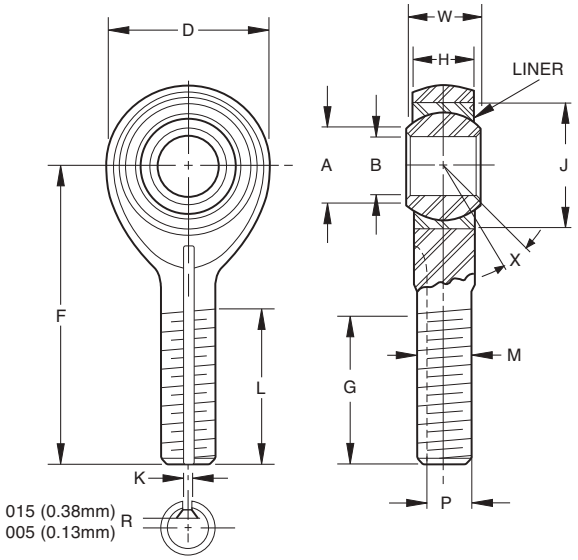

SPECIFICATIONS AND ORDERING INFORMATION

DIMENSIONS — TOLERANCES

PART NUMBERS MSSE Dash No.	01-858 Dash No.	B +0.000, -.0005 +0.00, -.013		D ±.010 ±.25		L ±.031 ±.79		F ±.010 ±.25		W +.000, -.002 +.00, -.05		H ±.005 ±.13		A Min.		J Max.		G +.000, -.020 +.00, -.51		K(1) +.005, -.000 +.13, -.00		P(1) +.000, -.005 +.00, -.13		M UNJF-3A PER AS8879	X° Min.
		in.	mm	in.	mm	in.	mm	in.	mm	in.	mm	in.	mm	in.	mm	in.	mm	in.	mm	in.	mm	in.	mm		
03	-03	.1900	4.826	.806	20.47	.968	24.59	1.562	39.67	.437	11.10	.337	8.56	.30	7.6	.6250	15.875	.980	24.89	.062	1.57	.268	6.81	$^5/_{16}$-24	15
04	-04	.2500	6.350	.806	20.47	.968	24.59	1.562	39.67	.437	11.10	.337	8.56	.30	7.6	.6250	15.875	.980	24.89	.062	1.57	.268	6.81	$^5/_{16}$-24	15
05	-05	.3125	7.938	.900	22.86	1.187	30.15	1.875	47.62	.437	11.10	.327	8.31	.36	9.1	.6875	17.462	1.270	32.26	.062	1.57	.268	6.81	$^5/_{16}$-24	14
06	-06	.3750	9.525	1.025	26.04	1.187	30.15	1.938	49.23	.500	12.70	.416	10.57	.47	11.9	.8125	20.638	1.235	31.37	.093	2.36	.319	8.10	$^3/_8$-24	8
07	-07	.4375	11.112	1.150	29.21	1.281	32.54	2.125	53.98	.562	14.27	.452	11.48	.54	13.7	.9062	23.017	1.402	35.61	.093	2.36	.383	9.73	$^7/_{16}$-20	10
08	-08	.5000	12.700	1.337	33.96	1.468	37.29	2.438	61.93	.625	15.88	.515	13.08	.61	15.5	1.0000	25.400	1.589	40.36	.093	2.36	.445	11.30	$^1/_2$-20	9
10	-10	.6250	15.875	1.525	38.74	1.562	39.67	2.625	66.68	.750	19.05	.577	14.66	.75	19.1	1.1875	30.162	1.683	42.75	.125	3.18	.541	13.74	$^5/_8$-18	12
12	-12	.7500	19.050	1.775	45.08	1.687	42.85	2.875	73.02	.875	22.22	.640	16.26	.85	21.6	1.3750	34.925	1.808	45.92	.125	3.18	.663	16.84	$^3/_4$-16	13
14	-14	.8750	22.225	2.025	51.44	2.000	50.80	3.375	85.72	.875	22.22	.765	19.43	1.061	26.95	1.6250	41.275	2.121	53.87	.156	3.96	.777	19.74	$^7/_8$-14	6
16	-16	1.0000	25.400	2.775	70.48	2.343	59.51	4.125	104.78	1.375	34.92	1.015	25.78	1.27	32.3	2.1250	53.975	2.464	62.59	.187	4.75	1.136	28.85	$1^1/_4$-12	12

(1)Keyway when specified, is compatible with locking devices, AS81935/3 for sizes 3 thru 8, and NAS559 for sizes 10 thru 16.
Keyway tolerances not specified shall be in accordance with AS81935/3 or NAS513 as applicable.

LOAD RATINGS

MSSE Dash No.	01-858 Dash No.	Ultimate Static Load		Fatigue Load		Axial Proof Load		Weight Max.		No Load Rotational Breakaway Torque Min.		Max.	
		lbf.	N	lbf.	N	lbf.	N	lbs.	kg	in.-lbs.	Nm	in.-lbs.	Nm
03	-03	2360	10400	1470(1)	6550(2)	1000	4400	0.072	0.033	.5	.06	6	.68
04	-04	4860	21600	2380	10600	1000	4400	0.072	0.033	.5	.06	6	.68
05	-05	7180	32000	2770(3)	12200(3)	1100	4900	0.087	0.039	1	.11	15	1.70
06	-06	8550	38000	3570	16000	1660	7350	0.136	0.062	1	.11	15	1.70
07	-07	12000	53000	4800	21200	1850	8300	0.183	0.083	1	.11	15	1.70
08	-08	19500	86500	7680(3)	34000(3)	2040	9000	0.278	0.126	1	.11	15	1.70
10	-10	21900	98000	9180	40500	2430	10800	0.424	0.192	1	.11	15	1.70
12	-12	29300	129000	11600	52000	2810	12500	0.639	0.290	1	.11	15	1.70
14	-14	34500	153000	13100	58500	3320	14600	0.963	0.437	1	.11	24	2.71
16	-16	80300	355000	30400	134000	4340	19300	2.546	1.150	1	.11	24	2.71

(1)Based on bolt bending fatigue strength 180000 psi
(2)Based on bolt bending fatigue strength 127kg/mm^2.
(3)Shank limitation

Notes: For liner specifications or the following options:
- Stainless steel rod end body
- High temperature or high speed liners

Please see engineering section or contact RBC Aerospace Bearings.

Bearing configuration	Part number designations for a 0.2500 in. bore rod end	
Base P/N (no options)	MSSE04	01-858-04
Keyway on threads	MSSEK04	01-858-041
Left hand thread	MSSEL04	11-858-04

©2008, 2011, 2016 RBC Bearings Incorporated. All rights reserved.

SELF-LUBRICATED ROD END BEARING

- Female type, rod end
- High temperature — low wear
  -65°F to +325°F (-53.9°C to +162.8°C)
- Material: Bearing inner ring: CRES 440C
  Bearing outer ring: CRES 17-4PH
  Rod end housing: CRES 17-4PH, HRC 39-42, passivated
- Liner: Fibriloid® or "E" Uniflon® qualified to AS81820
- Threads conform to UNJF-3B per AS8879. For left hand thread add "L" or "1" depending on part number ordered
  Example: see below

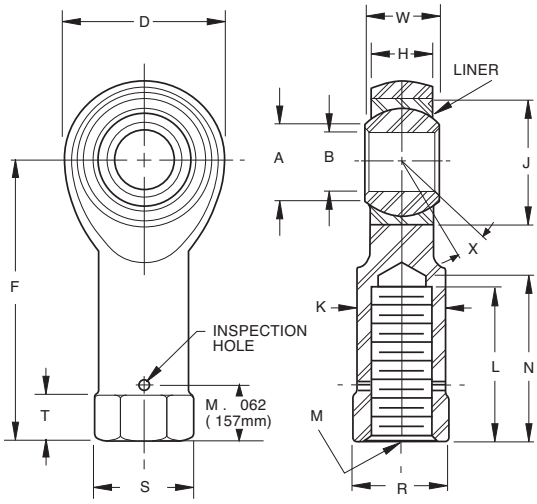

SPECIFICATIONS AND ORDERING INFORMATION

DIMENSIONS — TOLERANCES

PART NUMBERS FSSE Dash No.	02-858 Dash No.	B +0.000, -.0005 +0.00, -.013	D ±.010 ±.25	L(1) Min.	F ±.010 ±.25	K ±.010 ±.25	W +.000, -.002 +.00, -.05	H ±.005 ±.13	A Min.	J Max.	N Max.	S(2) Ref.	T +.010, -.062 +.25, -1.57	R(1) +.002, -.010 +.05, -.25	M UNJF-3B PER AS8879	X° Min.
		in. mm	in. mm	in. mm	in. mm	in. mm	in. mm	in. mm	in. mm	in. mm	in. mm	in. mm	in. mm	in. mm		
03	-03	.1900 4.826	.806 20.47	.750 19.05	1.375 34.92	.422 10.72	.437 11.10	.337 8.56	.30 7.6	.6250 15.875	.875 22.22	.500 12.70	.188 4.78	.437 11.10	$^5/_{16}$-24	15
04	-04	.2500 6.350	.806 20.47	.750 19.05	1.469 37.31	.422 10.72	.437 11.10	.337 8.56	.30 7.6	.6250 15.875	.875 22.22	.500 12.70	.188 4.78	.437 11.10	$^5/_{16}$-24	15
05	-05	.3125 7.938	.900 22.86	.875 22.22	1.625 41.28	.485 12.32	.437 11.10	.327 8.31	.36 9.1	.6875 17.462	1.000 25.40	.580 14.73	.250 6.35	.500 12.70	$^3/_8$-24	14
06	-06	.3750 9.525	1.025 26.04	1.000 25.40	1.812 46.02	.547 13.89	.500 12.70	.416 10.57	.47 11.9	.8125 20.638	1.125 28.58	.660 16.76	.250 6.35	.562 14.27	$^3/_{16}$-24	8
07	-07	.4375 11.112	1.150 29.21	1.125 28.58	2.000 50.80	.610 15.49	.562 14.27	.452 11.48	.54 13.7	.9062 23.017	1.250 31.75	.720 18.29	.250 6.35	.625 15.88	$^7/_{16}$-20	10
08	-08	.5000 12.700	1.337 33.96	1.250 31.75	2.250 57.15	.735 18.67	.625 15.88	.515 13.08	.61 15.5	1.0000 25.400	1.375 34.92	.880 22.35	.250 6.35	.750 19.05	$^1/_2$-20	9
10	-10	.6250 15.875	1.525 38.74	1.375 34.92	2.500 63.50	.860 21.84	.750 19.05	.577 14.66	.75 19.1	1.1875 30.162	1.500 38.10	1.020 25.91	.375 9.52	.875 22.22	$^5/_8$-18	12
12	-12	.7500 19.050	1.775 45.09	1.625 41.28	2.875 73.03	.985 25.02	.875 22.23	.640 16.26	.85 21.6	1.3750 34.925	1.750 44.45	1.160 29.46	.375 9.53	1.000 25.40	$^3/_4$ - 16	13
14	-14	.8750 22.225	2.025 51.44	1.875 47.63	3.375 85.73	1.110 28.19	.875 22.23	.765 19.43	1.00 25.4	1.6250 41.275	2.062 52.37	1.300 33.02	.500 12.70	1.125 28.58	$^7/_8$ - 14	6
16	-16	1.0000 25.400	2.775 70.49	2.125 53.98	4.125 104.78	1.688 42.88	1.375 34.93	1.015 25.78	1.27 32.3	2.1250 53.975	2.312 58.72	2.020 51.31	.563 14.30	1.750 44.45	$1^1/_4$ - 12	12

(1)Completed thread.
(2)Measured across corners or diameter.

LOAD RATINGS

FSSE Dash No.	02-858 Dash No.	Ultimate Static Load lbf.	Ultimate Static Load N	Fatigue Load lbf.	Fatigue Load N	Axial Proof Load lbf.	Axial Proof Load N	Weight Max. lbs.	Weight Max. kg	No Load Rotational Breakaway Torque Min. in.-lbs.	Min. Nm	Max. in.-lbs.	Max. Nm
03	-03	2360	10400	1470(1)	6550(2)	1000	4400	0.080	0.030	.5	.06	6	.68
04	-04	4860	21600	2380	10600	1000	4400	0.084	0.038	.5	.06	6	.68
05	-05	7180	32000	3020	13400	1100	4900	0.102	0.046	1	.11	15	1.70
06	-06	8550	38000	3570	16000	1660	7350	0.161	0.073	1	.11	15	1.70
07	-07	12000	53000	4800	21200	1850	8300	0.212	0.096	1	.11	15	1.70
08	-08	19500	86500	8260	36500	2040	9000	0.325	0.147	1	.11	15	1.70
10	-10	21900	98000	9180	40500	2430	10800	0.481	0.218	1	.11	15	1.70
12	-12	29300	130000	11600	51500	1810	11500	0.673	0.306	1	.11	15	1.70
14	-14	34500	151000	11100	58000	1320	14800	0.959	0.436	1	.11	24	2.71
16	-16	80300	357000	30400	135000	4340	19300	2.717	1.235	1	.11	24	2.71

Notes:

Ultimate Static Load — No fracture of rod ending housing or bearing will occur when the ultimate static load is applied in the bearing along th shank center line.

Axial Static Proof Load — Is the retention strength of the bearing within the eye of the rod end housing. No push out of the bearing cartridge will occur when the housing eye is supported and the axial proof load is applied to the face of insert bearing inner ring.

Fatigue Load — The rod end housing will withstand 50,000 cycles of full tension to 10% tension loading at speeds up to 2800 cpm. Load is applied in line with the rod end shank putting the eye in tension.

(1)Based on bolt bending fatigue strength 180000 psi
(2)Based on bolt bending fatigue strength 127kg/mm^2.

Check for availability.

Bearing configuration	Part number designations for a 0.2500 in. bore rod end	
Base P/N (no options)	FSSE04	02-858-04
Keyway on threads	FSSEK04	02-858-041
Left hand thread	FSSEL04	12-858-04

©2008, 2011, 2016 RBC Bearings Incorporated. All rights reserved.

RBC AEROSPACE BEARINGS

SELF-LUBRICATED ROD END BEARING

- Male type, rod end
- High temperature — low wear
  -65°F to +325°F (-53.9°C to +162.8°C)
- Material: Bearing inner ring: CRES 440C
  Bearing outer ring: CRES 17-4PH
  Rod end housing: CRES 17-4PH, HRC 39-42, passivated
- Liner: Fibriloid® or "E" Uniflon® qualified to AS81820
- Rolled threads conform to UNJF-3A per AS8879
  For rod ends with left hand thread add "L" or "1" depending on part number ordered. Example: see below
- For rod ends with slotted shank or "keyway"
  add "K" or "1" Example: see below

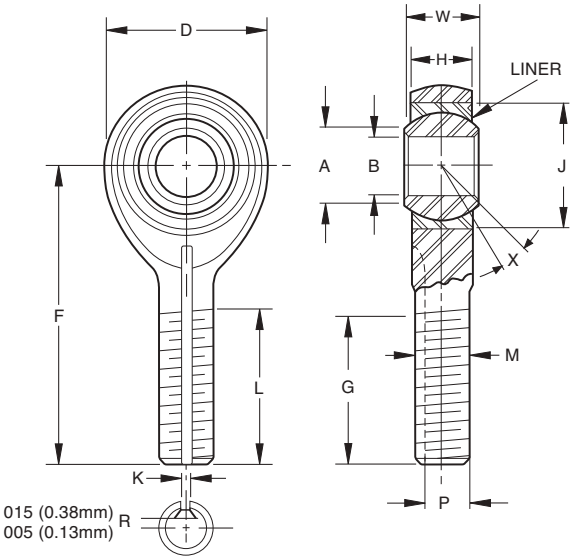

SPECIFICATIONS AND ORDERING INFORMATION

DIMENSIONS — TOLERANCES

PART NUMBERS MSSE-AN Dash No.	B		D		L		F		W		H		A		J		G		K(1)		P(1)		M	X°
	+0.000, -.0005 +0.00, -.013		±.010 ±.25		±.031 ±.79		±.010 ±.25		+.000, -.002 +.00, -.05		±.005 ±.13		Min.		Max.		+.000, -.020 +.00, -.51		+.005, -.000 +.13, -.00		+.000, -.005 +.00, -.13		UNJF-3A PER AS8879	Min.
	in.	mm	in.	mm	in.	mm	in.	mm	in.	mm	in.	mm	in.	mm	in.	mm	in.	mm	in.	mm	in.	mm		
03	.1900	4.826	.680	17.27	.775	19.69	1.315	33.40	.281	7.14	.228	5.79	.293	7.44	.6250	15.875	.896	22.76	.062	1.57	.207	5.26	1/4-28	10
04	.2500	6.350	.827	21.01	.775	19.69	1.443	36.65	.343	8.71	.260	6.60	.364	9.25	.6250	15.875	.896	22.76	.062	1.57	.207	5.26	1/4-28	10
05	.3125	7.938	.984	24.99	1.187	30.15	1.948	49.48	.375	9.53	.291	7.39	.419	10.64	.6875	17.462	1.308	33.22	.062	1.57	.268	6.81	5/16-24	10
06	.3750	9.525	1.131	28.73	1.187	30.15	2.030	51.56	.406	10.31	.322	8.18	.475	12.07	.8125	20.638	1.308	33.22	.093	2.36	.319	8.10	3/8-24	9
07	.4375	11.112	1.294	32.87	1.281	32.54	2.250	57.15	.437	11.10	.353	8.97	.530	13.46	.9062	23.017	1.402	35.61	.093	2.36	.383	9.73	7/16-20	8
08	.5000	12.700	1.459	37.06	1.462	37.13	2.544	64.62	.500	12.70	.400	10.16	.600	15.24	1.0000	25.400	1.589	40.36	.093	2.36	.445	11.30	1/2-20	8
10	.6250	15.875	1.763	44.78	1.582	40.18	2.832	71.93	.625	15.88	.510	12.95	.739	18.77	1.1875	30.162	1.683	42.75	.125	3.18	.541	13.74	5/8-18	8
12	.7500	19.050	2.140	54.36	1.687	42.85	3.193	81.10	.750	19.05	.603	15.32	.920	23.37	1.3750	34.925	1.808	45.92	.125	3.18	.663	16.84	3/4-16	8
14	.8750	22.225	2.372	60.25	2.000	50.80	3.677	93.40	.875	22.23	.713	18.11	.980	24.89	1.6250	41.275	2.121	53.87	.156	3.96	.777	19.74	7/8-14	8
16	1.0000	25.400	2.681	68.10	2.100	53.34	3.988	101.30	1.000	25.40	.807	20.50	1.118	28.40	2.1250	53.975	2.221	56.41	.156	3.96	.900	22.86	1-12	9

(1)Keyway when specified, is compatible with locking devices, AS81935/3 for sizes 3 thru 8, and NAS559 for sizes 10 thru 16.
Keyway tolerances not specified shall be in accordance with AS81935/3 or NAS513 as applicable.

LOAD RATINGS

PART NUMBERS MSSE-AN Dash No.	Ultimate Static Radial Load		Fatigue Load		Axial Proof Load		Approx. Weight		No Load Rotational Breakaway Torque Min.		Max.	
	lbf.	N	lbf.	N	lbf.	N	lbs.	kg	in.-lbs.	Nm	in.-lbs.	Nm
03	1000	11320	1100	4884	150	666	0.038	0.017	0.5	0.06	6	0.68
04	5300	21532	1500	6660	430	1909	0.045	0.020	0.5	0.06	6	0.68
05	8600	38184	1400	10656	700	1108	0.081	0.037	1	0.11	15	1.70
06	11000	57720	1600	15984	1100	4884	0.120	0.055	1	0.11	15	1.70
07	17800	79032	5000	21200	1400	6216	0.172	0.078	1	0.11	15	1.70
08	24200	107448	6800	30192	1040	9058	0.254	0.115	1	0.11	15	1.70
10	38500	170940	10800	47952	1430	10789	0.455	0.207	1	0.11	15	1.70
12	56600	251304	16000	71040	1940	11054	0.774	0.352	1	0.11	15	1.70
14	77400	341656	21900	97236	1190	14164	1.141	0.519	1	0.11	24	2.71
16	101400	450216	28600	126984	1570	15851	1.646	0.748	1	0.11	24	2.71

(1)Based on bolt bending fatigue strength 180000 psi
(2)Based on bolt bending fatigue strength 127kg/mm^2.
(3)Shank limitation

Notes: For liner specifications or the following options:
- Stainless steel rod end body
- High temperature or high speed liners

Please see engineering section or contact RBC Aerospace Bearings.

Bearing configuration	Part number designations for a 0.2500 in. bore rod end
Base P/N (no options)	MSSE04AN
Keyway on threads	MSSEK04AN
Left hand thread	MSSEL04AN

©2008, 2011, 2016 RBC Bearings Incorporated. All rights reserved.

SELF-LUBRICATED ROD END BEARING

- Female type, rod end
- High temperature — low wear
  -65°F to +325°F (-53.9°C to +162.8°C)
- Material: Bearing inner ring: CRES 440C
  Bearing outer ring: CRES 17-4PH
  Rod end housing: CRES 17-4PH, HRC 39-42, passivated
- Liner: Fibriloid® or "E" Uniflon® qualified to AS81820
- Threads conform to UNJF-3B per AS8879. For left hand thread add "L" or "1" depending on part number ordered
  Example: see below
- For rod end with keyway in end of shank add "K" or "1"
  Example: see below
- For both keyway in end of shank and left hand thread, combine options as shown below

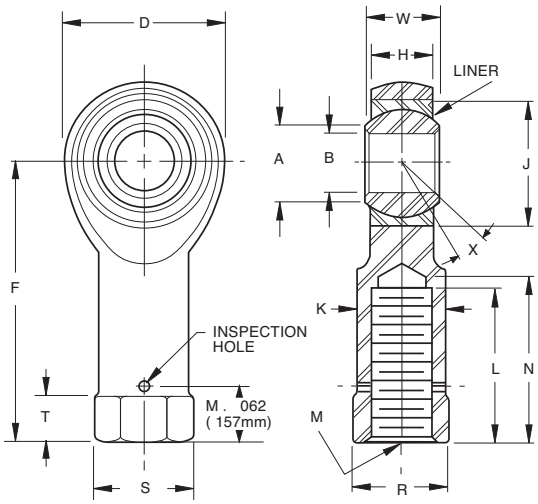

SPECIFICATIONS AND ORDERING INFORMATION

DIMENSIONS — TOLERANCES

PART NUMBERS FSSE-AN Dash No.	B +0.000, -.0005 +0.00, -.013		D ±.010 ±.25		L(1) Min.		F ±.010 ±.25		K ±.010 ±.25		W +.000, -.002 +.00, -.05		H ±.005 ±.13		A Min.		J Max.		N Max.		S(2) Ref.		T +.010, -.062 +.25, -1.57		R(1) +.002, -.010 +.05, -.25		M UNJF-3B PER AS8879	X° Min.
	in.	mm	in.	mm	in.	mm	in.	mm	in.	mm	in.	mm	in.	mm	in.	mm	in.	mm	in.	mm	in.	mm	in.	mm	in.	mm		
03	.1900	4.826	.680	17.27	.625	15.88	1.210	30.73	.329	8.36	.281	7.14	.228	5.79	.293	7.44	.5625	14.29	.750	19.05	.430	10.92	.188	4.78	.375	9.53	1/4-28	10
04	.2500	6.350	.827	21.01	.625	15.88	1.338	33.99	.329	8.36	.343	8.71	.260	6.60	.364	9.25	.6562	16.67	.750	19.05	.430	10.92	.188	4.78	.375	9.53	1/4-28	10
05	.3125	7.938	.984	24.99	.750	19.05	1.566	39.78	.413	10.49	.375	9.53	.291	7.39	.419	10.64	.7500	19.05	.875	22.23	.500	12.70	.188	4.78	.437	11.10	5/16-24	10
06	.3750	9.525	1.131	28.73	1.000	25.40	1.908	48.46	.501	12.73	.406	10.31	.322	8.18	.475	12.07	.8125	20.64	1.125	28.58	.720	18.29	.250	6.35	.625	15.88	3/8-24	9
07	.4375	11.113	1.294	32.87	1.125	28.58	2.125	53.98	.584	14.83	.437	11.10	.353	8.97	.530	13.46	.9062	23.02	1.250	31.75	.720	18.29	.250	6.35	.625	15.88	7/16-20	8
08	.5000	12.700	1.459	37.06	1.250	31.75	2.356	59.84	.672	17.07	.500	12.70	.400	10.16	.600	15.24	1.0000	25.40	1.375	34.93	1.020	25.91	.375	9.53	.875	22.23	1/2-20	8
10	.6250	15.875	1.763	44.78	1.375	34.93	2.707	68.76	.845	21.46	.625	15.88	.510	12.95	.739	18.77	1.1875	30.16	1.500	38.10	1.020	25.91	.375	9.53	.875	22.23	5/8-18	8
12	.7500	19.050	2.140	54.36	1.625	41.28	3.193	81.10	1.017	25.83	.750	19.05	.603	15.32	.920	23.37	1.4375	36.51	1.750	44.45	1.300	33.02	.500	12.70	1.125	28.58	3/4-16	8
14	.8750	22.225	2.372	60.25	1.875	47.63	3.677	93.40	1.187	30.15	.875	22.23	.713	18.11	.980	24.89	1.5625	39.69	2.062	52.37	1.375	34.93	.500	12.70	1.250	31.75	7/8-14	8
16	1.0000	25.400	2.681	68.10	2.125	53.98	4.101	104.17	1.356	34.44	1.000	25.40	.807	20.50	1.118	28.40	1.7500	44.45	2.312	58.72	1.590	40.39	.500	12.70	1.375	34.93	1-12	9

(1)Completed thread.
(2)Measured across corners or diameter.

LOAD RATINGS

PART NUMBERS FSSE-AN Dash No.	Ultimate Static Radial Load		Fatigue Load		Axial Proof Load		Approx. Weight		No Load Rotational Breakaway Torque Min.		Max.	
	lbf.	N	lbf.	N	lbf.	N	lbs.	kg	in.-lbs.	Nm	in.-lbs.	Nm
03	1000	11320	1100	4884	150	666	0.044	0.020	0.5	0.06	6	0.68
04	5500	24420	1300	5772	430	1909	0.052	0.024	0.5	0.06	6	0.68
05	8900	39516	1000	8880	700	1108	0.087	0.040	1	0.11	15	1.70
06	11400	59496	1100	11764	1100	4884	0.137	0.062	1	0.11	15	1.70
07	18200	80808	4200	18648	1400	6216	0.193	0.088	1	0.11	15	1.70
08	24600	109224	5700	25308	1040	9058	0.279	0.127	1	0.11	15	1.70
10	39500	175380	9200	40848	1430	10789	0.504	0.229	1	0.11	15	1.70
12	57200	251968	11500	59940	1940	11054	0.860	0.391	1	0.11	15	1.70
14	77800	345432	18400	81696	1190	14164	1.266	0.575	1	0.11	24	2.71
16	101000	448440	24000	106560	1570	15851	1.814	0.825	1	0.11	24	2.71

(1)Based on bolt bending fatigue strength 180000 psi
(2)Based on bolt bending fatigue strength 127kg/mm^2.
(3)Shank limitation

Notes: For liner specifications or the following options:
- Stainless steel rod end body
- High temperature or high speed liners

Please see engineering section or contact RBC Aerospace Bearings.

Bearing configuration	Part number designations for a 0.2500 in. bore rod end
Base P/N (no options)	FSSE04AN
Keyway on threads	FSSEK04AN
Left hand thread	FSSEL04AN

©2008, 2011, 2016 RBC Bearings Incorporated. All rights reserved.

RBC AEROSPACE BEARINGS

EN6056 SELF-LUBRICATED ROD END BEARING

- Male type, rod end
- High temperature, low wear, -65°F to +325°F (-53.9°C to +162.8°C)
- Material: Bearing inner ring: CRES 440C
  Bearing outer ring: CRES 17-4PH
  Rod end housing: CRES 17-4PH
  to 180,000 psi min. tensile strength
  Exposed surface of rod end housing cadmium plated
- Liner: Fibriloid® or "E" Uniflon® qualified to AS81820
- Rolled threads conform to UNJF-3A per MIL-S-8879. For rod ends with left hand thread add "L"
- For rod ends with slotted shank or "keyway" add "K" or "1"
- For both keyway and left hand thread, combine options
- For normal starting torque requirements add letter "N" or "R" for reduced torque requirements
- For rod ends with longitudinal groove, add letter "K" or "F" for rod ends without groove

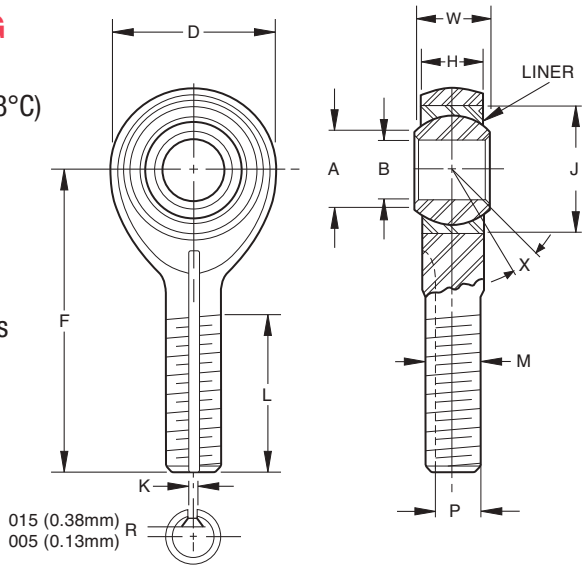

SPECIFICATIONS AND ORDERING INFORMATION

DIMENSIONS — TOLERANCES

Part Number MSSExx6056 Dash No.	Part Number EN6056 Dash No.	B +.0000, - .0005 +.000, -.013		D +0.010, -.010 +0.25, -.25		L +0.060, -.030 0, -0.13		F +0.010, -.010 +0.25, -.25		W +.000, -.002 +.00, -.05		H +.005, -.005 ±.13, -.13		A min.		J max.		K +.005, -.000 +.13, -.00		P +.000, -.005 +.00, -.13		M UNJF-3A	X° Min.
		in.	mm	in.	mm	in.	mm	in.	mm	in.	mm	in.	mm	in.	mm	in.	mm	in.	mm	in.	mm		
03	03	0.1900	4.826	0.806	20.47	0.968	24.59	1.562	39.67	0.437	11.10	0.337	8.56	0.300	7.62	0.6250	15.875	0.062	1.575	0.260	6.604	.3125-24	15
04	04	0.2500	6.350	0.806	20.47	0.968	24.59	1.562	39.67	0.437	11.10	0.337	8.56	0.300	7.62	0.6250	15.875	0.062	1.575	0.260	6.604	.3125-24	15
041	041	0.2500	6.350	0.806	20.47	1.787	45.39	2.442	62.03	0.437	11.10	0.337	8.56	0.300	7.62	0.6250	15.875	0.062	1.575	0.260	6.604	.3125-24	15
05	05	0.3125	7.938	0.900	22.86	1.187	30.15	1.875	47.63	0.437	11.10	0.327	8.31	0.360	9.14	0.6875	17.463	0.062	1.575	0.260	6.604	.3125-24	14
051	051	0.3125	7.938	0.900	22.86	1.457	37.01	2.270	57.66	0.437	11.10	0.327	8.31	0.360	9.14	0.6875	17.463	0.062	1.575	0.260	6.604	.3125-24	14
06	06	0.3750	9.525	1.025	26.04	1.187	30.15	1.938	49.23	0.500	12.70	0.416	10.57	0.466	11.84	0.8125	20.638	0.093	2.362	0.311	7.899	.3750-24	8
061	061	0.3750	9.525	1.025	26.04	1.654	42.01	2.422	61.52	0.500	12.70	0.416	10.57	0.466	11.84	0.8125	20.638	0.093	2.362	0.311	7.899	.3750-24	8
07	07	0.4375	11.113	1.150	29.21	1.281	32.54	2.125	53.98	0.562	14.27	0.452	11.48	0.537	13.64	0.9375	23.813	0.093	2.362	0.370	9.398	.4375-20	10
08	08	0.5000	12.700	1.337	33.96	1.468	37.29	2.438	61.93	0.625	15.88	0.515	13.08	0.607	15.42	1.0000	25.400	0.093	2.362	0.436	11.074	.5000-20	9
081	081	0.5000	12.700	1.337	33.96	2.216	56.29	3.144	79.86	0.625	15.88	0.515	13.08	0.607	15.42	1.0000	25.400	0.093	2.362	0.436	11.074	.5000-20	9
10	10	0.6250	15.875	1.525	38.74	1.562	39.67	2.625	66.68	0.750	19.05	0.577	14.66	0.747	18.97	1.1875	30.163	0.125	3.175	0.541	13.741	.6250-18	12
101	101	0.6250	15.875	1.525	38.74	2.110	53.59	3.190	81.03	0.750	19.05	0.577	14.66	0.747	18.97	1.1875	30.163	0.125	3.175	0.541	13.741	.6250-18	12
12	12	0.7500	19.050	1.775	45.09	1.687	42.85	2.875	73.03	0.875	22.23	0.640	16.26	0.845	21.46	1.3750	34.925	0.125	3.175	0.663	16.840	.7500-16	13
14	14	0.8750	22.225	2.025	51.44	2.000	50.80	3.375	85.73	0.875	22.23	0.785	19.94	0.995	25.27	1.6250	41.275	0.156	3.962	0.777	19.736	.8750-14	6
16	16	1.0000	25.400	2.775	70.49	2.343	59.51	4.125	104.78	1.375	34.93	1.015	25.78	1.269	32.23	2.1250	53.975	0.187	4.750	1.136	28.854	1.2500-12	13

Removed G column

LOAD RATINGS

Part Number MSSExx6056 Dash No.	Part Number EN6056 Dash No.	Radial Loads Limit Load		Radial Loads Ultimate Load		Axial Proof Load		Fatigue Load		Starting Torque Normal		Starting Torque Reduced		Approx Weight	
		kN	lbf	kN	lbf	kN	lbf	kN	lbf	Nm	in-lbs	Nm	in-lbs	kg	lbs.
03	03	20.0	4500	30.0	6700	7.9	1800	4.7	1100	.06- 0.56	0.5- 5.0	0.0- 0.11	0.0- 1.0	0.033	0.07
04	04	20.0	4500	30.0	6700	7.9	1800	4.7	1100	.11- 0.56	1.0- 5.0	0.0- 0.11	0.0- 1.0	0.033	0.07
041	041	20.0	4500	30.0	6700	7.9	1800	4.7	1100	.11- 0.56	1.0- 5.0	0.0- 0.11	0.0- 1.0	0.041	0.09
05	05	20.0	4500	30.0	6700	7.3	1600	4.9	1100	.11- 0.56	1.0- 5.0	0.0- 0.11	0.0- 1.0	0.039	0.09
051	051	20.0	4500	30.0	6700	7.3	1600	4.9	1100	.11- 0.56	1.0- 5.0	0.0- 0.11	0.0- 1.0	0.043	0.09
06	06	29.1	6500	43.6	9800	11.7	2600	6.7	1500	.11- 0.56	1.0- 5.0	0.0- 0.11	0.0- 1.0	0.062	0.14
061	061	29.1	6500	43.6	9800	11.7	2600	6.7	1500	.11- 0.56	1.0- 5.0	0.0- 0.11	0.0- 1.0	0.068	0.15
07	07	31.4	7100	47.1	10600	14.4	3200	8.5	1900	.11- 0.56	1.0- 5.0	.03- 0.15	0.3- 1.3	0.083	0.18
08	08	57.2	12900	85.8	19300	15.4	3500	13.7	3100	.11- 0.56	1.0- 5.0	.03- 0.15	0.3- 1.3	0.126	0.28
081	081	57.2	12900	85.8	19300	15.4	3500	13.7	3100	.11- 0.56	1.0- 5.0	.03- 0.15	0.3- 1.3	0.141	0.31
10	10	66.9	15000	100.4	22600	18.3	4100	15.5	3500	.11- 0.56	1.0- 5.0	.03- 0.15	0.3- 1.3	0.192	0.42
101	101	66.9	15000	100.4	22600	18.3	4100	15.5	3500	.11- 0.56	1.0- 5.0	.03- 0.15	0.3- 1.3	0.212	0.47
12	12	88.2	19800	132.2	29700	22.9	5100	20.4	4600	.11- 0.56	1.0- 5.0	.03- 0.15	0.3- 1.3	0.290	0.64
14	14	102.8	23100	154.2	34700	27.1	6100	23.8	5400	.23- 0.90	2.0- 8.0	.04- 0.25	0.4- 2.2	0.437	0.96
16	16	230.9	51900	348.9	78400	35.4	8000	53.3	12000	.23- 0.90	2.0- 8.0	.04- 0.25	0.4- 2.2	1.150	2.54

DESIGNATION EXAMPLE

Description Block: ROD-END

Identity Block: EN6056 R 04 N T K

- No. of this standard
- Thread code
- Diameter code
- Starting torque
- Surface treatment
- Longitudinal groove code

©2008, 2011, 2016 RBC Bearings Incorporated. All rights reserved.

CRES METAL-TO-METAL ROD END BEARING

- Male type, rod end
- High temperature — low wear
  -65°F to +325°F (-53.9°C to +162.8°C)
- Material: Bearing inner ring: CRES 440C, HRC 55-62
  Bearing outer ring: CRES 17-4PH, HRC 28-37
  Rod end housing: CRES 17-4PH, HRC 39-42, passivated
- Rolled threads conform to UNJF-3A per AS8879
  For rod ends with left hand thread add "L" or "1"
  depending on part number ordered. Example: see below
- For rod ends with slotted shank or "keyway" add "K" or "1"
  Example: see below

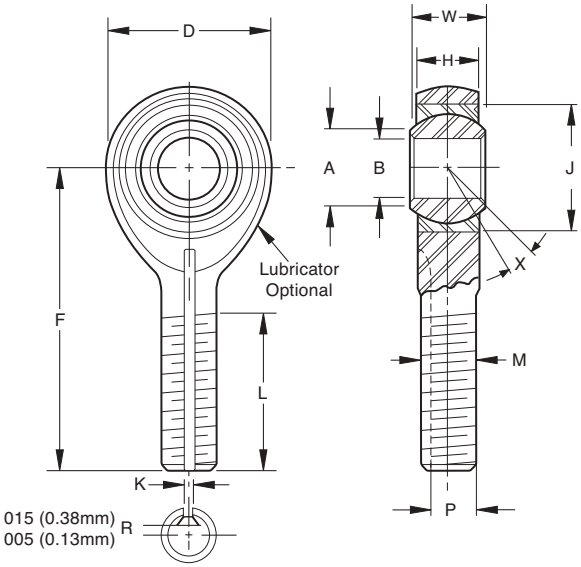

SPECIFICATIONS AND ORDERING INFORMATION

DIMENSIONS — TOLERANCES

PART NUMBERS MSSxx Dash No.	B +0.000, -.005 +0.00, -.13		D ±.010 ±.25		L ±.031 ±.79		F ±.010 ±.25		W +.000, -.002 +.00, -.05		H ±.005 ±.13		A Min.		J Max.		K(1) +.005, -.000 +.13, -.00		P(1) +.000, -.005 +.00, -.13		M UNJF-3A PER AS8879	X° Min.
	in.	mm	in.	mm	in.	mm	in.	mm	in.	mm	in.	mm	in.	mm	in.	mm	in.	mm	in.	mm		
03	.1900	4.826	.806	20.47	.968	24.59	1.562	39.67	.437	11.10	.337	8.56	.30	7.6	.6250	15.875	.062	1.57	.268	6.81	5/16-24	15
04	.2500	6.350	.806	20.47	.968	24.59	1.562	39.67	.437	11.10	.337	8.56	.30	7.6	.6250	15.875	.062	1.57	.268	6.81	5/16-24	15
05	.3125	7.938	.900	22.86	1.187	30.15	1.875	47.62	.437	11.10	.327	8.31	.36	9.1	.6875	17.462	.062	1.57	.268	6.81	5/16-24	14
06	.3750	9.525	1.025	26.04	1.187	30.15	1.938	49.23	.500	12.70	.416	10.57	.47	11.9	.8125	20.638	.093	2.36	.319	8.10	3/8-24	8
07	.4375	11.112	1.150	29.21	1.281	32.54	2.125	53.98	.562	14.27	.452	11.48	.54	13.7	.9062	23.017	.093	2.36	.383	9.73	7/16-20	10
08	.5000	12.700	1.337	33.96	1.468	37.29	2.438	61.93	.625	15.88	.515	13.08	.61	15.5	1.0000	25.400	.093	2.36	.445	11.30	1/2-20	9
10	.6250	15.875	1.525	38.74	1.562	39.67	2.625	66.68	.750	19.05	.577	14.66	.75	19.1	1.1875	30.162	.125	3.18	.541	13.74	5/8-18	12
12	.7500	19.050	1.775	45.08	1.687	42.85	2.875	73.02	.875	22.22	.640	16.26	.85	21.6	1.3750	34.925	.125	3.18	.663	16.84	3/4-16	13
14	.8750	22.225	2.025	51.44	2.000	50.80	3.375	85.72	.875	22.22	.765	19.43	1.061	26.95	1.6250	41.275	.156	3.96	.777	19.74	7/8-14	6
16	1.0000	25.400	2.775	70.48	2.343	59.51	4.125	104.78	1.375	34.92	1.015	25.78	1.27	32.3	2.1250	53.975	.187	4.75	1.136	28.85	1 1/4-12	12

(1)Keyway when specified, is compatible with locking devices, AS81935/3 for sizes 3 thru 8, and NAS559 for sizes 10 thru 16.
Keyway tolerances not specified shall be in accordance with AS81935/3 or NAS513 as applicable.

Removed G column

LOAD RATINGS

PART NUMBER MSSxx Dash No.	Static Radial Limit Load(1)		Axial Proof Load		Approx. Weight		Maximum Radial Clearance	
	lbf.	N	lbf.	N	lbs.	kg	in.	mm
03	4675(2)	20800	1000	4400	0.072	0.033	0.002	0.05
04	6060	27000	1000	4400	0.072	0.033	0.002	0.05
05	7300	32500	1100	4900	0.087	0.039	0.002	0.05
06	8860	39400	1660	7400	0.136	0.062	0.002	0.05
07	9560	42500	1850	8200	0.183	0.083	0.002	0.05
08	18560	82600	2040	9100	0.278	0.126	0.002	0.05
10	20600	91600	2430	10800	0.424	0.192	0.002	0.05
12	27640	122900	2810	12500	0.639	0.290	0.002	0.05
14	32150	143000	3320	14800	0.963	0.437	0.002	0.05
16	72270	321500	4340	19300	2.546	1.155	0.002	0.05

(1)Load ratings apply to bearings without lubricators
(2)Based on pin limitation
Notes: Available with lubricators, solid film and lubrication holes and grooves in ball.

Bearing configuration	Part number designations for a 0.2500 in. bore rod end
Base P/N (no options)	MSS04
Keyway on threads	MSSK04
Left hand thread	MSSL04

©2008, 2011, 2016 RBC Bearings Incorporated. All rights reserved.

CRES METAL-TO-METAL ROD END BEARING

- Female type, rod end
- High temperature — low wear
  -65°F to +325°F (-53.9°C to +162.8°C)
- Material: Bearing inner ring: CRES 440C, HRC 55-62
  Bearing outer ring: CRES 17-4PH, HRC 28-37
  Rod end housing: CRES 17-4PH, HRC 39-42, passivated
- Threads conform to UNJF-3B per MIL-S-8879. For left hand thread add "L" or "1" depending on part number ordered
  Example: see below
- For rod end with keyway in end of shank add "K" or "1"
  Example: see below

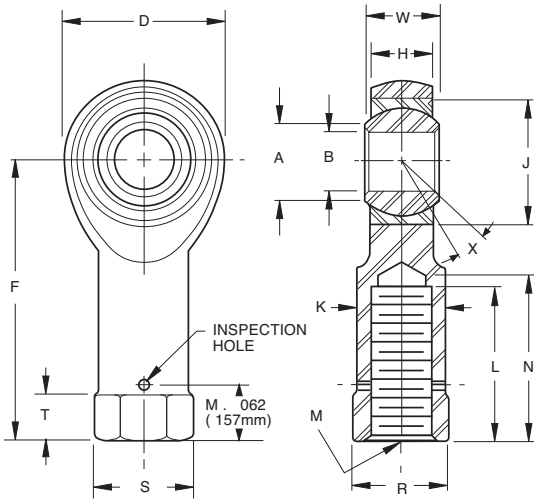

SPECIFICATIONS AND ORDERING INFORMATION

DIMENSIONS — TOLERANCES

PART NUMBERS FSSxx Dash No.	B +0.000, -.0005 +0.00, -.013	D ±.010 ±.25	L Min.	F ±.010 ±.25	K ±.010 ±.25	W +.000, -.002 +.00, -.05	H ±.005 ±.13	A Min.	J Max.	N Max.	S[1] Ref.	T +.010, -.062 +.25, -1.57	R +.002, -.010 +.05, -.25	M UNJF-3B PER AS8879	X° Min.
	in. mm	in. mm	in. mm	in. mm	in. mm	in. mm	in. mm	in. mm	in. mm	in. mm	in. mm	in. mm	in. mm		
03	.1900 4.826	.806 20.47	.750 19.05	1.375 34.92	.422 10.72	.437 11.10	.337 8.56	.30 7.6	.6250 15.875	.875 22.22	.500 12.70	.188 4.78	.437 11.10	5/16-24	15
04	.2500 6.350	.806 20.47	.750 19.05	1.469 37.31	.422 10.72	.437 11.10	.337 8.56	.30 7.6	.6250 15.875	.875 22.22	.500 12.70	.188 4.78	.437 11.10	5/16-24	15
05	.3125 7.938	.900 22.86	.875 22.22	1.625 41.28	.485 12.32	.437 11.10	.327 8.31	.36 9.1	.6875 17.462	1.000 25.40	.580 14.73	.250 6.35	.500 12.70	3/8-24	14
06	.3750 9.525	1.025 26.04	1.000 25.40	1.812 46.02	.547 13.89	.500 12.70	.416 10.57	.47 11.9	.8125 20.638	1.125 28.58	.660 16.76	.250 6.35	.562 14.27	3/16-24	8
07	.4375 11.112	1.150 29.21	1.125 28.58	2.000 50.80	.610 15.49	.562 14.27	.452 11.48	.54 13.7	.9062 23.017	1.250 31.75	.720 18.29	.250 6.35	.625 15.88	7/16-20	10
08	.5000 12.700	1.337 33.96	1.250 31.75	2.250 57.15	.735 18.67	.625 15.88	.515 13.08	.61 15.5	1.0000 25.400	1.375 34.92	.880 22.35	.250 6.35	.750 19.05	1/2-20	9
10	.6250 15.875	1.525 38.74	1.375 34.92	2.500 63.50	.860 21.84	.750 19.05	.577 14.66	.75 19.1	1.1875 30.162	1.500 38.10	1.020 25.91	.375 9.52	.875 22.22	5/8-18	12
12	.7500 19.050	1.775 45.09	1.625 41.28	2.875 73.03	.985 25.02	.875 22.23	.640 16.26	.85 21.6	1.3750 34.925	1.750 44.45	1.160 29.46	.375 9.53	1.000 25.40	3/4 - 16	13
14	.8750 22.225	2.025 51.44	1.875 47.63	3.375 85.73	1.110 28.19	.875 22.23	.765 19.43	1.00 25.4	1.6250 41.275	2.062 52.37	1.300 33.02	.500 12.70	1.125 28.58	7/8 - 14	6
16	1.0000 25.400	2.775 70.49	2.125 53.98	4.125 104.78	1.688 42.88	1.375 34.93	1.015 25.78	1.27 32.3	2.1250 53.975	2.312 58.72	2.020 51.31	.563 14.30	1.750 44.45	1 1/4 - 12	12

[1]Measured across corners or diameter.

LOAD RATINGS

Part Number FSSxx Dash No.	Part Number 02-858 Dash No.	Static Radial Limit Load lbf.	Static Radial Limit Load N	Axial Proof Load lbf.	Axial Proof Load N	Approx. Weight lbs.	Approx. Weight kg	Maximum Radial Clearance in.	Maximum Radial Clearance mm
03	-03	4675[1]	20800	1000	4400	0.080	0.036	0.002	0.05
04	-04	6060	27000	1000	4400	0.084	0.038	0.002	0.05
05	-05	7300	32500	1100	4900	0.102	0.046	0.002	0.05
06	-06	8860	39400	1660	7400	0.161	0.073	0.002	0.05
07	-07	9560	42500	1850	8200	0.212	0.096	0.002	0.05
08	-08	18560	82600	2040	9100	0.325	0.147	0.002	0.05
10	-10	20600	91600	2430	10800	0.481	0.218	0.002	0.05
12	-12	27640	122900	2810	12500	0.673	0.305	0.002	0.05
14	-14	32150	143000	3320	14800	0.963	0.437	0.002	0.05
16	-16	72270	321500	4340	19300	2.717	1.232	0.002	0.05

[1]Based on pin limitation

Notes:

Ultimate Static Load — No fracture of rod ending housing or bearing will occur when the ultimate static load is applied in the bearing along th shank center line.

Axial Static Proof Load — Is the retention strength of the bearing within the eye of the rod end housing. No push out of the bearing cartridge will occur when the housing eye is supported and the axial proof load is applied to the face of insert bearing inner ring.

Fatigue Load — The rod end housing will withstand 50,000 cycles of full tension to 10% tension loading at speeds up to 2800 cpm. Load is applied in line with the rod end shank putting the eye in tension.

Bearing configuration	Part number designations for a 0.2500 in. bore rod end
Base P/N (no options)	FSSE04
Keyway on threads	FSSEK04
Left hand thread	FSSEL04

©2008, 2011, 2016 RBC Bearings Incorporated. All rights reserved.

HIGH MISALIGNMENT SELF-LUBRICATED ROD END BEARING

- Male type, rod end
- Material: Ball: CRES 440C, Heat treated
  Race: CRES 17-4PH, Heat treated
  Rod end body: CRES 17-4PH, Heat treated
- Liner: Fibriloid® or "E" Uniflon® qualified to AS81820
- Rolled threads conform to UNJ-3A. For rod ends with left hand thread add "L" or "1" depending on part number ordered. Example: see below
- For rod ends with slotted shank or "keyway" add "K" or "1" Example: see below

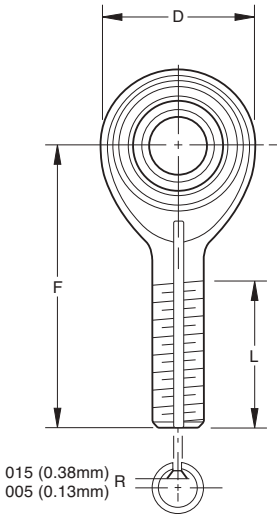

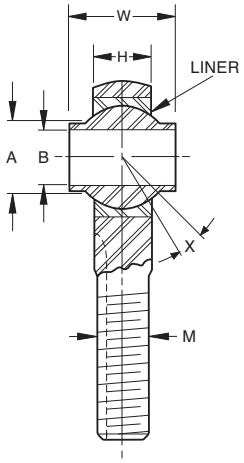

SPECIFICATIONS AND ORDERING INFORMATION

DIMENSIONS — TOLERANCES

PART NUMBERS MSSE xxH Dash No.	01-827 Dash No.	B +.0000, -.0005 +0.00, -0.013		D ±.010 ±0.25		L ±.060 ±1.52		F ±.010 ±0.25		W +.000, -.005 +0.00, -.13		H ±.002 ±.05		A REF.		M UNF-3A	X° REF.
		in.	mm	in.	mm	in.	mm	in.	mm	in.	mm	in.	mm	in.	mm		
03H	-03	.1900	4.826	.781	19.84	1.000	25.40	1.562	39.67	.560	14.22	.337	8.56	.301	7.65	5/16-24	16
03HA	-03A	.1900	4.826	.750	19.05	1.000	25.40	1.500	38.10	.500	12.70	.220	5.59	.319	8.10	5/16-24	15
04H	-04	.2500	6.350	1.000	25.40	1.250	31.75	1.938	49.23	.593	15.06	.265	6.73	.390	9.91	5/16-24	23
05H	-05	.3125	7.938	1.125	25.58	1.375	34.93	2.125	53.98	.813	20.65	.355	8.89	.512	13.00	5/16-24	23
05HA	-05A	.3125	7.938	.875	22.23	1.062	26.97	1.875	47.63	.625	15.88	.265	6.73	.418	10.62	5/16-24	16
06H	-06	.3750	9.525	1.125	28.58	1.375	34.93	2.125	53.98	.813	20.65	.355	8.89	.512	13.00	3/8-24	23
07H	-07	.4375	11.112	1.312	33.32	1.500	38.10	2.437	61.90	.875	22.23	.355	8.89	.618	15.70	7/16-20	22
08H	-08	.5000	12.700	1.500	38.10	1.625	41.28	2.625	66.68	.937	23.80	.411	10.44	.730	18.54	1/2-20	20
10H	-10	.6250	15.875	1.750	44.45	1.750	44.45	2.875	73.03	1.200	30.48	.577	14.66	.856	21.74	5/8-18	20
12H	-12	.7500	19.050	2.000	50.80	1.875	47.63	3.375	85.73	1.280	32.51	.630	16.00	.970	24.64	3/4-16	18
14H	-14	.8750	22.225	2.200	55.88	2.000	50.80	3.750	95.25	1.400	35.56	.635	16.13	1.140	28.96	7/8-14	18
16H	-16	1.0000	25.400	2.725	69.85	2.125	53.98	4.125	104.78	1.875	47.63	.845	21.46	1.278	32.46	1 1/4-12	21
20H	-20	1.2500	31.750	3.125	79.38	2.875	73.03	5.000	127.00	1.875	47.63	1.015	25.78	1.523	38.68	1 1/4-12	21

LOAD RATINGS

PART NUMBERS MSSE xxH Dash No.	01-827 Dash No.	Static Radial Limit Load		Weight Approx.		No Load Rotational Breakaway Torque	
		lbf.	N	lbs.	kg	in.-lbs.	Nm
03H	-03	4060(1)	18059	.08	0.04	0.5 - 6	0.06 - 0.68
03HA	-03A	4060(1)	18059	.06	0.03	0.5 - 6	0.06 - 0.68
04H	-04	7040(1)	31314	.11	0.05	1 - 15	0.11 - 1.70
05H	-05	8260	36874	.18	0.08	1 - 15	0.11 - 1.70
05HA	-05A	5300	23574	.10	0.05	1 - 15	0.11 - 1.70
06H	-06	8260	36740	.17	0.08	1 - 15	0.11 - 1.70
07H	-07	12420	55244	.26	0.12	1 - 15	0.11 - 1.70
08H	-08	17430	77529	.40	0.18	1 - 15	0.11 - 1.70
10H	-10	23620	105062	.63	0.29	1 - 15	0.11 - 1.70
12H	-12	30550	135886	.87	0.39	1 - 24	0.11 - 2.71
14H	-14	31970	142203	1.01	0.46	1 - 24	0.11 - 2.71
16H	-16	59510	264700	2.31	1.05	1 - 24	0.11 - 2.71
20H	-20	70060	313869	3.15	1.43	1 - 24	0.11 - 2.71

(1) Based on pin limitation.

Notes: Available with lubricators, solid film lubricant and lubrication holes and groove in ball.

Please see engineering section or contact RBC Aerospace Bearings.

Bearing configuration	Part number designations for a 0.2500 in. bore rod end	
Base P/N (no options)	MSSE04H	01-827-04
Keyway on threads	MSSEK04H	01-827-041
Left hand thread	MSSEL04H	11-827-04

©2008, 2011, 2016 RBC Bearings Incorporated. All rights reserved.

RBC AEROSPACE BEARINGS

HIGH MISALIGNMENT SELF-LUBRICATED ROD END BEARING

- Female type, rod end
- Material: Ball: CRES 440C, Heat treated
  Race: CRES 17-4PH, Heat treated
  Rod end body: CRES 17-4PH, Heat treated
- Liner: Fibriloid® or "E" Uniflon® qualified to AS81820
- Rolled threads conform to UNJ-3B. For rod ends with left hand thread add "L" or "1" depending on part number ordered. Example: see below
- For rod ends with slotted shank or "keyway" add "K" or "1" Example: see below

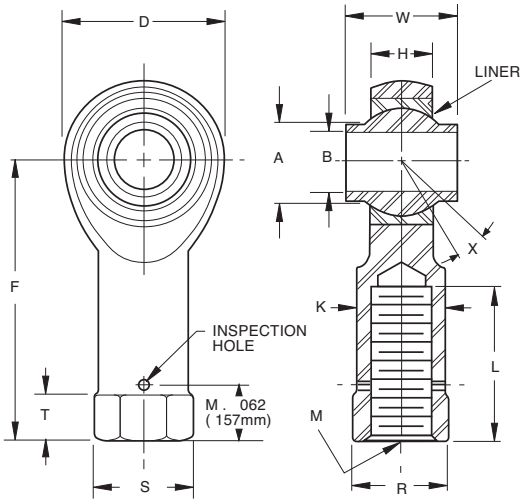

SPECIFICATIONS AND ORDERING INFORMATION

DIMENSIONS — TOLERANCES

PART NUMBERS FSSE xxH Dash No.	02-827 Dash No.	B +0.000, -.0005 +0.00, -0.013		D ±.010 ±0.25		L ±.060 ±1.52		F ±.010 ±0.25		W +.000, -.005 +0.00, -.13		H ±.005 ±0.13		A REF.		S Max.		K ±.010 ±0.25		T +.010,-.062 +0.25,-1.57		R +.000,-.005 +.00,-.13		M UNF-3B	X° REF.
		in.	mm	in.	mm	in.	mm	in.	mm	in.	mm	in.	mm	in.	mm	in.	mm	in.	mm	in.	mm	in.	mm		
03H	-03	.1900	4.826	.781	19.84	.750	19.05	1.625	41.28	.560	14.22	.337	8.56	.301	7.65	.562	14.27	.500	12.70	.250	6.35	.515	13.08	$^5/_{16}$-24	16
03HA	-03A	.1900	4.826	.750	19.05	.750	19.05	1.375	34.93	.500	12.70	.220	5.59	.319	8.10	.500	12.70	.437	11.10	.250	6.35	.452	11.48	$^5/_{16}$-24	15
04H	-04	.2500	6.350	1.000	25.40	.937	23.80	1.625	41.28	.593	15.06	.265	6.73	.390	9.91	.625	15.86	.562	14.27	.250	6.35	.577	14.66	$^5/_{16}$-24	23
05H	-05	.3125	7.938	1.125	25.58	1.062	26.97	1.812	46.02	.813	20.65	.355	8.89	.512	13.00	.688	17.48	.625	15.88	.250	6.35	.640	16.26	$^5/_{16}$-24	23
05HA	-05A	.3125	7.938	.875	22.23	.750	19.05	1.375	34.93	.625	15.88	.265	6.73	.418	10.62	.500	12.70	.437	11.10	.250	6.35	.452	11.48	$^5/_{16}$-24	16
06H	-06	.3750	9.525	1.125	28.58	1.062	26.97	1.812	46.02	.813	20.65	.355	8.89	.512	13.00	.688	17.48	.625	15.88	.250	6.35	.640	16.26	$^3/_8$-24	23
07H	-07	.4375	11.112	1.312	33.32	1.125	28.58	2.125	53.98	.875	22.23	.355	8.89	.618	15.70	.812	20.62	.750	19.05	.250	6.35	.765	19.43	$^7/_{16}$-20	22
08H	-08	.5000	12.700	1.500	38.10	1.500	38.10	2.625	66.68	.937	23.80	.411	10.44	.730	18.54	.938	23.83	.875	22.23	.375	9.53	.890	22.87	$^1/_2$-20	20
10H	-10	.6250	15.875	1.750	44.45	1.750	44.45	2.875	73.03	1.200	30.48	.577	14.66	.856	21.74	1.125	28.58	1.000	25.40	.375	9.53	1.015	25.78	$^5/_8$-18	20
12H	-12	.7500	19.050	2.000	50.80	1.875	47.63	3.375	85.73	1.280	32.51	.630	16.00	.970	24.64	1.250	31.75	1.125	28.58	.500	12.70	1.140	28.96	$^3/_4$-16	18
14H	-14	.8750	22.225	2.200	55.88	2.000	50.80	3.750	95.25	1.400	35.56	.635	16.13	1.140	28.96	1.250	31.75	1.125	28.58	.500	12.70	1.140	28.96	$^7/_8$-14	18
16H	-16	1.0000	25.400	2.725	69.85	2.125	53.98	4.125	104.78	1.875	47.63	.845	21.46	1.278	32.46	1.813	46.05	1.688	42.88	.562	14.30	1.703	43.26	$1^1/_4$-12	21
20H	-20	1.2500	31.750	3.125	79.38	3.125	79.38	5.000	127.00	1.875	47.63	1.015	25.78	1.523	38.68	1.813	46.05	1.688	42.88	.562	14.30	1.703	43.26	$1^1/_4$-12	21

LOAD RATINGS

PART NUMBERS FSSE xxH Dash No.	02-827 Dash No.	Static Radial Limit Load		Weight Approx.		No Load Rotational Breakaway Torque	
		lbf.	N	lbs.	kg	in.-lbs.	Nm
03H	-03	4060[1]	18059	.08	0.04	0.5 - 6	0.06 - 0.68
03HA	-03A	4060[1]	18059	.06	0.03	0.5 - 6	0.06 - 0.68
04H	-04	7040[1]	31314	.11	0.05	1 - 15	0.11 - 1.70
05H	-05	8260	36874	.18	0.08	1 - 15	0.11 - 1.70
05HA	-05A	5300	23574	.10	0.05	1 - 15	0.11 - 1.70
06H	-06	8260	36740	.17	0.08	1 - 15	0.11 - 1.70
07H	-07	12420	55244	.26	0.12	1 - 15	0.11 - 1.70
08H	-08	17430	77529	.40	0.18	1 - 15	0.11 - 1.70
10H	-10	23620	105062	.63	0.29	1 - 15	0.11 - 1.70
12H	-12	30550	135886	.87	0.39	1 - 24	0.11 - 2.71
14H	-14	31970	142203	1.01	0.46	1 - 24	0.11 - 2.71
16H	-16	59510	264700	2.31	1.05	1 - 24	0.11 - 2.71
20H	-20	70060	313869	3.15	1.43	1 - 24	0.11 - 2.71

[1] Based on pin limitation.

Notes: Available with lubricators, solid film lubricant and lubrication holes and groove in ball.

Please see engineering section or contact RBC Aerospace Bearings.

Bearing configuration	Part number designations for a 0.2500 in. bore rod end	
Base P/N (no options)	FSSE04H	02-827-04
Keyway on threads	FSSEK04H	02-827-041
Left hand thread	FSSEL04H	12-827-04

©2008, 2011, 2016 RBC Bearings Incorporated. All rights reserved.

HIGH MISALIGNMENT METAL-TO-METAL ROD END BEARING

- Male type, rod end
- Material: Ball: CRES 440C, Heat treated
  Race: CRES 17-4PH, Heat treated
  Rod end body: CRES 17-4PH, Heat treated
- Rolled threads conform to UNJ-3A. For rod ends with left hand thread add “L” or “1” depending on part number ordered. Example: see below
- For rod ends with slotted shank or “keyway” add “K” or “1” Example: see below

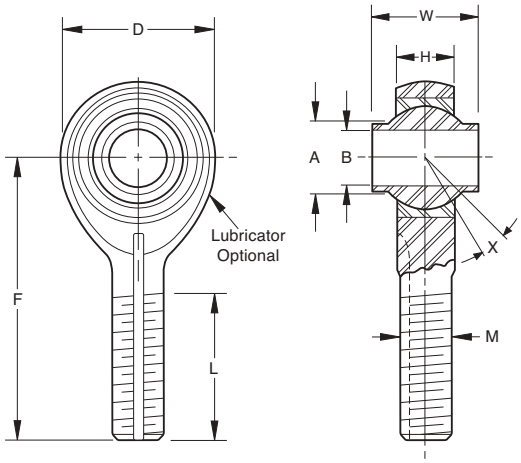

SPECIFICATIONS AND ORDERING INFORMATION

DIMENSIONS — TOLERANCES

PART NUMBERS MSS xxH Dash No.	01-507 Dash No.	B		D		L		F		W		H		A		M	X°
		+.0000, -.0005 +0.00, -0.013		±.010 ±0.25		±.060 ±1.52		±.010 ±0.25		+.000, -.005 +0.00, -.13		±.005 ±0.13		REF.		UNF-3A	REF.
		in.	mm	in.	mm	in.	mm	in.	mm	in.	mm	in.	mm	in.	mm		
03H	-03	.1900	4.826	.781	19.84	1.000	25.40	1.562	39.67	.560	14.22	.337	8.56	.301	7.65	5/16-24	16
03HA	-03A	.1900	4.826	.750	19.05	1.000	25.40	1.500	38.10	.500	12.70	.220	5.59	.319	8.10	5/16-24	15
04H	-04	.2500	6.350	1.000	25.40	1.250	31.75	1.938	49.23	.593	15.06	.265	6.73	.390	9.91	5/16-24	23
05H	-05	.3125	7.938	1.125	25.58	1.375	34.93	2.125	53.98	.813	20.65	.355	8.89	.512	13.00	5/16-24	23
05HA	-05A	.3125	7.938	.875	22.23	1.062	26.97	1.875	47.63	.625	15.88	.265	6.73	.418	10.62	5/16-24	16
06H	-06	.3750	9.525	1.125	28.58	1.375	34.93	2.125	53.98	.813	20.65	.355	8.89	.512	13.00	3/8-24	23
07H	-07	.4375	11.112	1.312	33.32	1.500	38.10	2.437	61.90	.875	22.23	.355	8.89	.618	15.70	7/16-20	22
08H	-08	.5000	12.700	1.500	38.10	1.625	41.28	2.625	66.68	.937	23.80	.411	10.44	.730	18.54	1/2-20	20
10H	-10	.6250	15.875	1.750	44.45	1.750	44.45	2.875	73.03	1.200	30.48	.577	14.66	.856	21.74	5/8-18	20
12H	-12	.7500	19.050	2.000	50.80	1.875	47.63	3.375	85.73	1.280	32.51	.630	16.00	.970	24.64	3/4-16	18
14H	-14	.8750	22.225	2.200	55.88	2.000	50.80	3.750	95.25	1.400	35.56	.635	16.13	1.140	28.96	7/8-14	18
16H	-16	1.0000	25.400	2.725	69.85	2.125	53.98	4.125	104.78	1.875	47.63	.845	21.46	1.278	32.46	1 1/4-12	21
20H	-20	1.2500	31.750	3.125	79.38	2.875	73.03	5.000	127.00	1.875	47.63	1.015	25.78	1.523	38.68	1 1/4-12	21

LOAD RATINGS

PART NUMBERS MSS xxH Dash No.	01-507 Dash No.	Static Radial Limit Load		Weight Approx.		Maximum Radial Clearance	
		lbf.	N	lbs.	kg	in.	mm
03H	-03	4060(1)	18059	.08	0.04	.002	0.05
03HA	-03A	4060(1)	18059	.06	0.03	.002	0.05
04H	-04	7040(1)	31314	.11	0.05	.002	0.05
05H	-05	8260	36874	.18	0.08	.002	0.05
05HA	05A	5300	23574	.10	0.05	.002	0.05
06H	-06	8260	36740	.17	0.08	.002	0.05
07H	-07	12420	55244	.26	0.12	.002	0.05
08H	-08	17430	77529	.40	0.18	.002	0.05
10H	-10	23620	105062	.63	0.29	.002	0.05
12H	-12	30550	135886	.87	0.39	.002	0.05
14H	-14	31970	142203	1.01	0.46	.002	0.05
16H	-16	59510	264700	2.31	1.05	.002	0.05
20H	-20	70060	313869	3.15	1.43	.002	0.05

(1) Based on pin limitation.

Notes: Available with lubricators, solid film lubricant and lubrication holes and groove in ball.

Please see engineering section or contact RBC Aerospace Bearings.

Bearing configuration	Part number designations for a 0.2500 in. bore rod end	
Base P/N (no options)	MSS04H	01-507-04
Keyway on threads	MSSK04H	01-507-041
Left hand thread	MSSL04H	11-507-04

©2008, 2011, 2016 RBC Bearings Incorporated. All rights reserved.

RBC AEROSPACE BEARINGS

HIGH MISALIGNMENT METAL-TO-METAL ROD END BEARING

- Female type, rod end
- Material: Ball: CRES 440C, Heat treated
  Race: CRES 17-4PH, Heat treated
  Rod end body: CRES 17-4PH, Heat treated
- Rolled threads conform to UNJ-3B. For rod ends with left hand thread add “L” or “1” depending on part number ordered. Example: see below
- For rod ends with slotted shank or “keyway” add “K” or “1” Example: see below

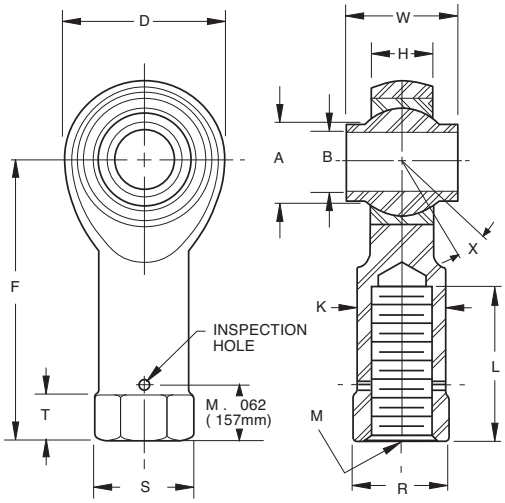

SPECIFICATIONS AND ORDERING INFORMATION

DIMENSIONS — TOLERANCES

PART NUMBERS FSS xxH Dash No.	02-507 Dash No.	B		D		L		F		W		H		A		S		K		T		R		M	X°
		+0.000, -.0005 +0.00, -0.013		±.010 ±0.25		±.060 ±1.52		±.010 ±0.25		+.000, -.005 +0.00, -.13		±.005 ±0.13		REF.		Max.		±.010 ±0.25		+.010,-.062 +0.25,-1.57		+.000,-.005 +.00,-.13		UNF-3B	REF.
		in.	mm	in.	mm	in.	mm	in.	mm	in.	mm	in.	mm	in.	mm	in.	mm	in.	mm	in.	mm	in.	mm		
03H	-03	.1900	4.826	.781	19.84	.750	19.05	1.625	41.28	.560	14.22	.337	8.56	.301	7.65	.562	14.27	.500	12.70	.250	6.35	.515	13.08	$^5/_{16}$-24	16
03HA	-03	.1900	4.826	.750	19.05	.750	19.05	1.375	34.93	.500	12.70	.220	5.59	.319	8.10	.500	12.70	.437	11.10	.250	6.35	.452	11.48	$^5/_{16}$-24	15
04H	-04	.2500	6.350	1.000	25.40	.937	23.80	1.625	41.28	.593	15.06	.265	6.73	.390	9.91	.625	15.86	.562	14.27	.250	6.35	.577	14.66	$^5/_{16}$-24	23
05H	-05	.3125	7.938	1.125	25.58	1.062	26.97	1.812	46.02	.813	20.65	.355	8.89	.512	13.00	.688	17.48	.625	15.88	.250	6.35	.640	16.26	$^5/_{16}$-24	23
05HA	-05	.3125	7.938	.875	22.23	.750	19.05	1.375	34.93	.625	15.88	.265	6.73	.418	10.62	.500	12.70	.437	11.10	.250	6.35	.452	11.48	$^5/_{16}$-24	16
06H	-06	.3750	9.525	1.125	28.58	1.062	26.97	1.812	46.02	.813	20.65	.355	8.89	.512	13.00	.688	17.48	.625	15.88	.250	6.35	.640	16.26	$^3/_8$-24	23
07H	-07	.4375	11.112	1.312	33.32	1.125	28.58	2.125	53.98	.875	22.23	.355	8.89	.618	15.70	.812	20.62	.750	19.05	.250	6.35	.765	19.43	$^7/_{16}$-20	22
08H	-08	.5000	12.700	1.500	38.10	1.500	38.10	2.625	66.68	.937	23.80	.411	10.44	.730	18.54	.938	23.83	.875	22.23	.375	9.53	.890	22.87	$^1/_2$-20	20
10H	-10	.6250	15.875	1.750	44.45	1.750	44.45	2.875	73.03	1.200	30.48	.577	14.66	.856	21.74	1.125	28.58	1.000	25.40	.375	9.53	1.015	25.78	$^5/_8$-18	20
12H	-12	.7500	19.050	2.000	50.80	1.875	47.63	3.375	85.73	1.280	32.51	.630	16.00	.970	24.64	1.250	31.75	1.125	28.58	.500	12.70	1.140	28.96	$^3/_4$-16	18
14H	-14	.8750	22.225	2.200	55.88	2.000	50.80	3.750	95.25	1.400	35.56	.635	16.13	1.140	28.96	1.250	31.75	1.125	28.58	.500	12.70	1.140	28.96	$^7/_8$-14	18
16H	-16	1.0000	25.400	2.725	69.85	2.125	53.98	4.125	104.78	1.875	47.63	.845	21.46	1.278	32.46	1.813	46.05	1.688	42.88	.562	14.30	1.703	43.26	$1^1/_4$-12	21
20H	-20	1.2500	31.750	3.125	79.38	3.125	79.38	5.000	127.00	1.875	47.63	1.015	25.78	1.523	38.68	1.813	46.05	1.688	42.88	.562	14.30	1.703	43.26	$1^1/_4$-12	21

LOAD RATINGS

PART NUMBERS FSS xxH Dash No.	02-507 Dash No.	Static Radial Limit Load		Weight Approx.		No Load Rotational Breakaway Torque	
		lbf.	N	lbs.	kg	in.	mm
03H	-03	4060[1]	18059	.08	0.04	.002	0.05
03HA	-03A	4060[1]	18059	.06	0.03	.002	0.05
04H	-04	7040[1]	31314	.11	0.05	.002	0.05
05H	-05	8260	36874	.18	0.08	.002	0.05
05HA	-05A	5300	23574	.10	0.05	.002	0.05
06H	-06	8260	36740	.17	0.08	.002	0.05
07H	-07	12420	55244	.26	0.12	.002	0.05
08H	-08	17430	77529	.40	0.18	.002	0.05
10H	-10	23620	105062	.63	0.29	.002	0.05
12H	-12	30550	135886	.87	0.39	.002	0.05
14H	-14	31970	142203	1.01	0.46	.002	0.05
16H	-16	59510	264700	2.31	1.05	.002	0.05
20H	-20	70060	313869	3.15	1.43	.002	0.05

[1] Based on pin limitation.

Notes: Available with lubricators, solid film lubricant and lubrication holes and groove in ball.

Please see engineering section or contact RBC Aerospace Bearings.

Bearing configuration	Part number designations for a 0.2500 in. bore rod end	
Base P/N (no options)	FSS04H	02-507-04
Keyway on threads	FSSK04H	02-507-041
Left hand thread	FSSL04H	12-507-04

©2008, 2011, 2016 RBC Bearings Incorporated. All rights reserved.

HIGH TEMPERATURE SELF-LUBRICATED ROD END BEARING

- Male type, rod end
- High temperature — low wear
  -65°F to +600°F (-53.9°C to +301°C)
- Material
  Bearing inner ring: Cobalt Base Alloy with proprietary coating
  Bearing outer ring: A-286 race
  Rod end housing: CRES 17-4PH
- Liner: Fabroid® X
- Rolled threads conform to UNJF-3A per AS8879
  For rod ends with left hand thread add "1"
  Example: 11-450-06
- For rod ends with slotted shank or "keyway" add "1"
  Example: 01-450-061
- For both keyway and left hand thread, combine options as shown below. Example: 11-450-061

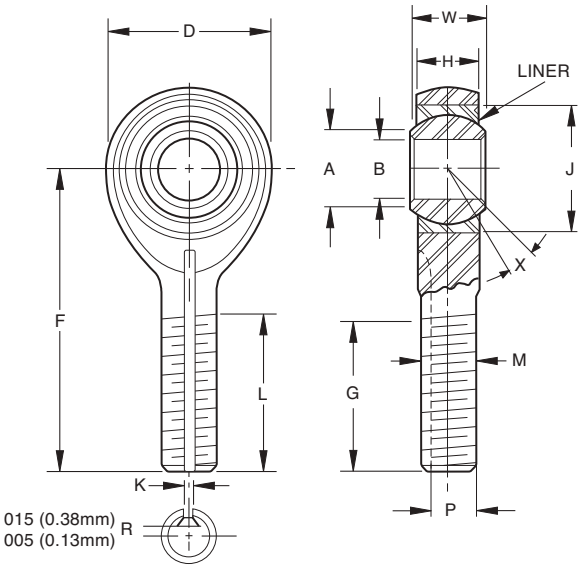

SPECIFICATIONS AND ORDERING INFORMATION

DIMENSIONS — TOLERANCES

PART NUMBER	B		D		L		F		W		H		A		J		G[1]		K[1]		P[1]		M	X°
	+0.000,-.0005 +0.00,-.013		±.010 ±.25		±.031 ±.79		±.010 ±.25		+.000,-.002 +.00,-.05		±.005 ±.13		Min.		Max.		+.000,-.020 +.00,-.51		+.005,-.000 +.13,-.00		+.000,-.005 +.00,-.13		UNJF-3A PER AS8879	Min.
	in.	mm	in.	mm	in.	mm	in.	mm	in.	mm	in.	mm	in.	mm	in.	mm	in.	mm	in.	mm	in.	mm		
01-450-03	.1900	4.826	.806	20.47	.968	24.59	1.562	39.67	.437	11.10	.337	8.56	.30	7.6	.6250	15.875	.980	24.89	.062	1.57	.268	6.81	$^{5}/_{16}$-24	15
01-450-04	.2500	6.350	.806	20.47	.968	24.59	1.562	39.67	.437	11.10	.337	8.56	.30	7.6	.6250	15.875	.980	24.89	.062	1.57	.268	6.81	$^{5}/_{16}$-24	15
01-450-05	.3125	7.938	.900	22.86	1.187	30.15	1.875	47.62	.437	11.10	.327	8.31	.36	9.1	.6875	17.462	1.270	32.26	.062	1.57	.268	6.81	$^{5}/_{16}$-24	14
01-450-06	.3750	9.525	1.025	26.04	1.187	30.15	1.938	49.23	.500	12.70	.416	10.57	.47	11.9	.8125	20.638	1.235	31.37	.093	2.36	.319	8.10	$^{3}/_{8}$-24	8
01-450-07	.4375	11.112	1.150	29.21	1.281	32.54	2.125	53.98	.562	14.27	.452	11.48	.54	13.7	.9062	23.017	1.402	35.61	.093	2.36	.383	9.73	$^{7}/_{16}$-20	10
01-450-08	.5000	12.700	1.337	33.96	1.468	37.29	2.438	61.93	.625	15.88	.515	13.08	.61	15.5	1.0000	25.400	1.589	40.36	.093	2.36	.445	11.30	$^{1}/_{2}$-20	9
01-450-10	.6250	15.875	1.525	38.74	1.562	39.67	2.625	66.68	.750	19.05	.577	14.66	.75	19.1	1.1875	30.162	1.683	42.75	.125	3.18	.541	13.74	$^{5}/_{8}$-18	12
01-450-12	.7500	19.050	1.775	45.08	1.687	42.85	2.875	73.02	.875	22.22	.640	16.26	.85	21.6	1.3750	34.925	1.808	45.92	.125	3.18	.663	16.84	$^{3}/_{4}$-16	13
01-450-14	.8750	22.225	2.025	51.44	2.000	50.80	3.375	85.72	.875	22.22	.765	19.43	1.061	26.95	1.6250	41.275	2.121	53.87	.156	3.96	.777	19.74	$^{7}/_{8}$-14	6
01-450-16	1.0000	25.400	2.775	70.48	2.343	59.51	4.125	104.78	1.375	34.92	1.015	25.78	1.27	32.3	2.1250	53.975	2.464	62.59	.187	4.75	1.136	28.85	$1^{1}/_{4}$-12	12

[1]Keyway when specified, is compatible with locking devices, AS81935/3 for sizes 3 thru 8, and NAS559 for sizes 10 thru 16.

Keyway tolerances not specified shall be in accordance with AS81935/3 or NAS513 as applicable.

LOAD RATINGS

PART NUMBER	Ultimate Static Load		Fatigue Load		Axial Proof Load		Weight Max.		No Load Rotational Breakaway Torque Min.		Max.	
	lbf.	N	lbf.	N	lbf.	N	lbs.	kg	in.-lbs.	Nm	in.-lbs.	Nm
01-450-03							0.042	0.019	.5	.06	6	.68
01-450-04							0.042	0.019	.5	.06	6	.68
01-450-05							0.050	0.023	.5	.06	6	.68
01-450-06							0.079	0.035	1	.11	15	1.70
01-450-07							0.106	0.048	1	.11	15	1.70
01-450-08							0.161	0.072	1	.11	15	1.70
01-450-10							0.245	0.110	1	.11	15	1.70
01-450-12							0.369	0.166	1	.11	15	1.70
01-450-14							0.557	0.250	1	.11	24	2.71
01-450-16							1.472	0.662	1	.11	24	2.71

Please contact the RBC Engineering Support Team for specific load information or to customize a high temperature product for your particular needs.

Bearing configuration	Part number designations for a 0.2500 in. bore rod end
Base P/N (no options)	01-450-04
Keyway on threads	01-450-041
Left hand thread	11-450-04

©2008, 2011, 2016 RBC Bearings Incorporated. All rights reserved.

HIGH TEMPERATURE SELF-LUBRICATED ROD END BEARING

- Female type, rod end
- High temperature — low wear
  -65°F to +600°F (-53.9°C to +301°C)
- Material: Bearing inner ring: Cobalt Base Alloy with proprietary coating
  Bearing outer ring: A-286 race
  Rod end housing: CRES 17-4PH
- Liner: Fabroid® X
- Rolled threads conform to UNJF-3B per AS8879
  For rod ends with left hand thread add "1"
  Example: 12-450-06
- For rod ends with slotted shank or "keyway" add "1"
  Example: 02-450-061
- For both keyway and left hand thread, combine options as shown below Example: 12-450-061

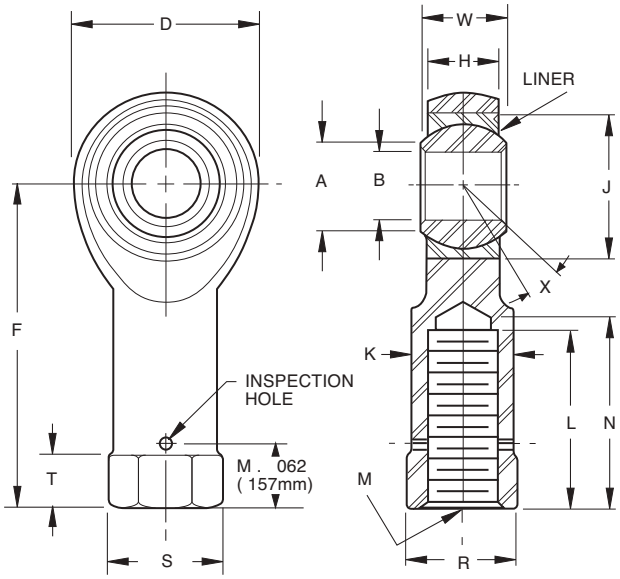

SPECIFICATIONS AND ORDERING INFORMATION

DIMENSIONS — TOLERANCES

PART NUMBER	B		D		L(1)		F		K		W		H		A		J		N		S(2)		T		R(1)		M	X°
	+0.000,-.0005 +0.00,-.013		±.010 ±.25		Min.		±.010 ±.25		±.010 ±.25		+.000,-.002 +.00,-.05		±.005 ±.13		Min.		Max.		Max.		Ref.		+.010,-.062 +.25,-1.57		+.002,-.010 +.05,-.25		UNJF-3B PER AS8879	Min.
	in.	mm	in.	mm	in.	mm	in.	mm	in.	mm	in.	mm	in.	mm	in.	mm	in.	mm	in.	mm	in.	mm	in.	mm	in.	mm		
02-450-03	.1900	4.826	.806	20.47	.750	19.05	1.375	34.92	.422	10.72	.437	11.10	.337	8.56	.30	7.6	.6250	15.875	..875	22.22	.500	12.70	.188	4.78	.437	11.10	5/16-24	15
02-450-04	.2500	6.350	.806	20.47	.750	19.05	1.469	37.31	.422	10.72	.437	11.10	.337	8.56	.30	7.6	.6250	15.875	.875	22.22	.500	12.70	.188	4.78	.437	11.10	5/16-24	15
02-450-05	.3125	7.938	.900	22.86	.875	22.22	1.625	41.28	.485	12.32	.437	11.10	.327	8.31	.36	9.1	.6875	17.462	1.000	25.40	.580	14.73	.250	6.35	.500	12.70	3/8-24	14
02-450-06	.3750	9.525	1.025	26.04	1.000	25.40	1.812	46.02	.547	13.89	.500	12.70	.416	10.57	.47	11.9	.8125	20.638	1.125	28.58	.660	16.76	.250	6.35	.562	14.27	3/18-24	8
02-450-07	.4375	11.112	1.150	29.21	1.125	28.58	2.000	50.80	.610	15.49	.562	14.27	.452	11.48	.54	13.7	.9062	23.017	1.250	31.75	.720	18.29	.250	6.35	.625	15.88	7/16-20	10
02-450-08	.5000	12.700	1.337	33.96	1.250	31.75	2.250	57.15	.735	18.67	.625	15.88	.515	13.08	.61	15.5	1.0000	25.400	1.375	34.92	.880	22.35	.250	6.35	.750	19.05	1/2-20	9
02-450-10	.6250	15.875	1.525	38.74	1.375	34.92	2.500	63.50	.860	21.84	.750	19.05	.577	14.66	.75	19.1	1.1875	30.162	1.500	38.10	1.020	25.91	.375	9.52	.875	22.22	5/8-18	12

(1)Completed thread.

(2)Measured across corners or diameter.

LOAD RATINGS

PART NUMBER	Ultimate Static Load		Fatigue Load		Axial Proof Load		Weight Max.		No Load Rotational Breakaway Torque Min.		Max.	
	lbf.	N	lbf.	N	lbf.	N	lbs.	kg	in.-lbs.	Nm	in.-lbs.	Nm
02-450-03							0.042	0.019	.5	.06	6	.68
02-450-04							0.042	0.019	.5	.06	6	.68
02-450-05							0.050	0.023	.5	.06	6	.68
02-450-06							0.079	0.035	1	.11	15	1.70
02-450-07							0.106	0.048	1	.11	15	1.70
02-450-08							0.161	0.072	1	.11	15	1.70
02-450-10							0.245	0.110	1	.11	15	1.70

Please contact the RBC Engineering Support Team for specific load information or to customize a high performing lightweight product for your particular needs.

Bearing configuration	Part number designations for a 0.2500 in. bore rod end
Base P/N (no options)	02-450-04
Keyway on threads	02-450-041
Left hand thread	12-450-04

©2008, 2011, 2016 RBC Bearings Incorporated. All rights reserved.

RBC Loader Slot Rod Ends

GENERAL FEATURES AND TECHNICAL SPECIFICATIONS

Rod End Body

The rod end body is designed to provide high strength and ductility. Common materials for the body are: 17-4PH, 15-5PH, Inconel® 718, nitrided.

Construction

This bearing provides misalignment and high load carrying capacity. And the ability to remove and replace the spherical ball.

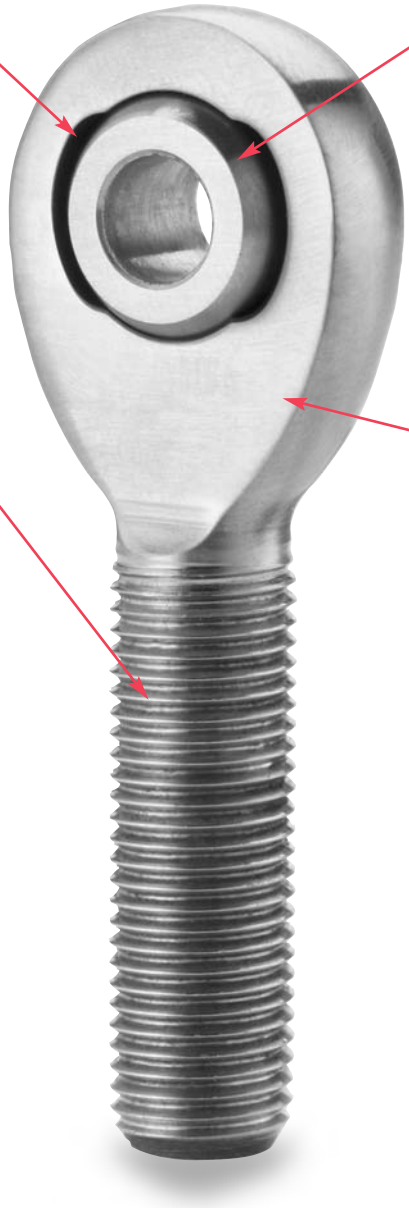

Design Features

The threads may be lubricated with various dry film lubricants or cadmium plated to provide lubricity during installation. Male/female and keyway options are available.

Materials

The ball material may be made from various materials including 440C, 52100 chrome platted, Stellite® 6 or PH13-8Mo to accommodate customer requirements.

Inconel® is a registered trademark of Alloys International, Inc. and The international Nickel Company, Inc.
Stellite® is a registered trademark of the Deloro Stellite Company, Inc.

©2008, 2011, 2016 RBC Bearings Incorporated. All rights reserved.

MALE ROD END BEARING

- Male type, rod end
- High temperature -65°F to +600°F (-53.89°C to +315.56°C)
- Material
  Ball: Cobalt Alloy per AMS 5387, HRC 37 minimum
  Rod End Housing: CRES 15-5PH per AMS 5659 Cond H-1025
- Surface treatment
  Ball O.D.: Solid film lubricant
  Rod end body I.D.: Nitrided

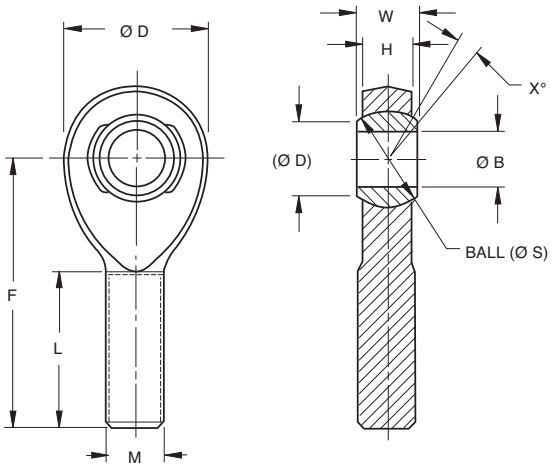

SPECIFICATIONS AND ORDERING INFORMATION

DIMENSIONS — TOLERANCES

MSSTMxxA Dash No.	B +.0000, - .0005 +.000, -.013		D +0.010, -.010 +0.25, -.25		L +0.030, -.030 +0.76, -.76		F +0.010, -.010 +0.25, -.25		W +.000, -.002 +.00, -.05		H +.000, -.020 +.00, -.51		A Ø Ref.		S Ø Ball O.D. Ref.		S Ø Ball O.D. Ref.	M UNJF-3A	X° Min.
	in.	mm	in.	mm	in.	mm	in.	mm	in.	mm	in.	mm	in.	mm	in.	mm			
03	0.1900	4.826	0.850	21.59	0.968	24.59	1.656	42.06	0.343	8.71	0.260	6.60	0.405	10.29	0.5300	13.462		.3125-24	12
04	0.2500	6.350	0.850	21.59	0.968	24.59	1.656	42.06	0.343	8.71	0.260	6.60	0.405	10.29	0.5300	13.462		.3125-24	12
05	0.3125	7.938	0.900	22.86	1.187	30.15	1.906	48.41	0.375	9.53	0.290	7.37	0.420	10.67	0.5625	14.288		.3125-24	12
06	0.3750	9.525	1.000	25.40	1.187	30.15	2.000	50.80	0.406	10.31	0.322	8.18	0.476	12.09	0.6250	15.875		.3750-24	11
07	0.4375	11.113	1.095	27.81	1.280	32.51	2.125	53.98	0.437	11.10	0.353	8.97	0.530	13.46	0.6865	17.437		.4375-20	10
08	0.5000	12.700	1.332	33.83	1.468	37.29	2.560	65.02	0.500	12.70	0.405	10.29	0.641	16.28	0.8125	20.638		.5000-20	9
10	0.6250	15.875	1.535	38.99	1.560	39.62	2.780	70.61	0.625	15.88	0.515	13.08	0.740	18.80	0.9680	24.587		.6250-18	9
12	0.7500	19.050	1.890	48.01	1.687	42.85	3.062	77.77	0.750	19.05	0.610	15.49	0.921	23.39	1.1870	30.150		.7500-18	9
14	0.8750	22.225	2.210	56.13	2.000	50.80	3.560	90.42	0.875	22.23	0.718	18.24	0.978	24.84	1.3120	33.325		.8750-14	9
16	1.0000	25.400	2.625	66.68	2.343	59.51	4.125	104.78	1.000	25.40	0.817	20.75	1.119	28.42	1.5000	38.100		1.2500-12	9

.002 inch max internal clearance (contact RBC engineering for reduced clearance design)

LOAD RATINGS

PART NUMBER	Radial Static Limit Load		Weight Approx.	
	lbf.	N	lbs.	kg
MSSTM03A	2,256	10,035	0.06	0.027
MSSTM04A	3,904	17,366	0.06	0.027
MSSTM05A	5,273	23,454	0.07	0.032
MSSTM06A	8,113	36,088	0.09	0.041
MSSTM07A	10,962	48,763	0.12	0.054
MSSTM08A	14,930	66,412	0.20	0.091
MSSTM10A	23,256	103,448	0.34	0.154
MSSTM12A	28,168	125,297	0.62	0.281
MSSTM14A	32,400	144,122	0.95	0.431
MSSTM16A	37,264	165,758	1.50	0.680

©2008, 2011, 2016 RBC Bearings Incorporated. All rights reserved.

RBC Journal Bearings

SELF-LUBRICATING

AS81934 Plain Series

M81934/1 Aluminum, Self-Lubricated, Plain Journal Series 74

M81934/1 CRES, Self-Lubricated, Plain Journal Series 75

AS81934 Flanged Series

M81934/2 Aluminum, Self-Lubricated, Flanged Journal Series. 76

M81934/2 CRES, Self-Lubricated, Flanged Journal Series. 77

EN Standard Series

EN2285 Aluminum, Self-Lubricated, Straight Journal Series. 78

EN2286 Aluminum, Self-Lubricated, Flanged Journal Series. 79

EN2287 CRES, Self-Lubricated, Straight Journal Series. 80

EN2288 CRES, Self-Lubricated, Flanged Journal Series. 81

High Temperature Plain/Flanged Series

High Temperature, Self-Lubricated, Straight Journal Series 82

High Temperature, Self-Lubricated, Flanged Journal Series 83

UNIFLON® HP Machinable Liner per AS81934

AS81934 Plain Series

M81934/1 Aluminum, Machinable Liner, Plain Journal Series 84

M81934/1 CRES, Machinable Liner, Plain Journal Series 85

AS81934 Flanged Series

M81934/2 Aluminum, Machinable Liner, Flanged Journal Series. . 86

M81934/2 CRES, Machinable Liner, Flanged Journal Series 87

Dyflon® Water Resistant Plain/Flanged Series

Dyflon®, Self-Lubricated, Straight Journal Series 88

Dyflon®, Self-Lubricated, Flanged Journal Series 89

Standard Bushing Feature Page 90

Unlined Bushings

NAS Plain/Flanged Series

NAS76 Unlined, Aluminum Bronze, Plain Bushing Series 91

NAS77 Unlined, Aluminum Bronze, Flanged Bushing Series . . . 92

MS Plain/Flanged Series

MS14237 Unlined, Aluminum Bronze, Plain Bushing Series 93

MS14238 Unlined, Aluminum Bronze, Flanged Bushing Series . . . 94

Special Bushings Feature Page. 95

Links and Assemblies Feature Page 96

GENERAL FEATURES AND TECHNICAL SPECIFICATIONS

Liner System

Bushings series are equipped with a self-lubricating liner system to reduce friction and extend operating life.

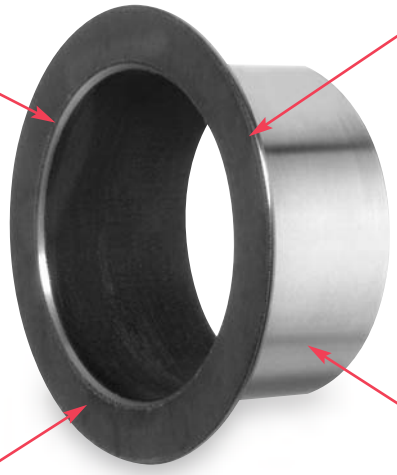

Design Features

Light weight and of compact design, this bearing are available in various bores of 1/16 in. and lengths of 1/32 in. increments.

Construction

A bushing is designed in a straight (or plain) configuration or with a flange to accommodate a combination of radial and axial load.

Materials

Typical bushing materials are 17-4PH and aluminum. Bearings may also be cadmium or zinc nickel plated as required. 440C and Inconel 718 are available as required.

©2008, 2011, 2016 RBC Bearings Incorporated. All rights reserved.

M81934/1 ALUMINUM SELF-LUBRICATED STRAIGHT JOURNAL BEARING

AS81934 (formerly MIL-B-81934)

- Journal type
- High temperature — low wear
  -65°F to +325°F (-53.9°C to +162.8°C)
- Material and notes: Aluminum alloy, Cond. T8511 anodized or chemical-film treated
  Liner: Fibriloid® or "E" Uniflon® qualified to AS81934

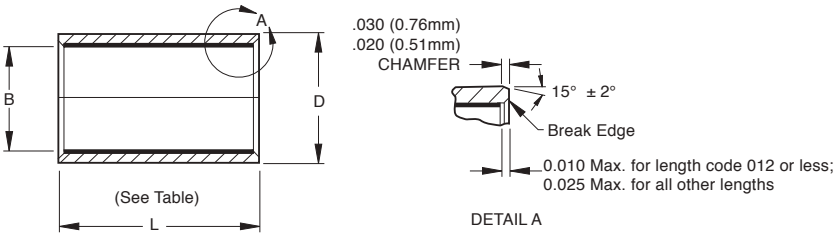

SPECIFICATIONS AND ORDERING INFORMATION

DIMENSIONS — TOLERANCES

Part Numbers Aluminum PBE( )A Dash No.	06-382 Dash No.	M81934/1( )A Dash No.	Nominal Size		B +.000, - .0010 +.000, -.25		D ±0005 ±013		Weight L = 1.000 in. L = 25.4 mm Ref.	
			in.	mm	in.	mm	in.	mm	lbs.-in	kg-mm
04	-04	-04†	1/4	6.350	.2515	6.388	.3760	9.550	.006	.003
05	-05	-05†	5/16	7.938	.3140	7.976	.4386	11.140	.008	.004
06	-06	-06†	3/8	9.525	.3765	9.563	.5012	12.730	.009	.004
07	-07	-07†	7/16	11.112	.4390	11.151	.5638	14.321	.010	.005
08	-08	-08†	1/2	12.700	.5015	12.738	.6265	15.913	.011	.005
09	-09	-09†	9/16	14.288	.5640	14.326	.6892	17.506	.013	.006
10	-10	-10†	5/8	15.875	.6265	15.913	.8142	20.681	.022	.010
11	-11	-11†	11/16	17.462	.6890	17.501	.8767	22.268	.023	.010
12	-12	-12†	3/4	19.050	.7515	19.088	.9393	23.858	.025	.011
14	-14	-14†	7/8	22.225	.8765	22.263	1.0645	27.038	.029	.013
16	-16	-16†	1	25.400	1.0015	25.438	1.1898	38.221	.033	.015
18	-18	-18†	1 1/8	28.575	1.1265	28.613	1.3148	33.396	.037	.017
20	-20	-20†	1 1/4	31.750	1.2515	31.788	1.4398	38.571	.040	.018
22	-22	-22†	1 3/8	34.925	1.3765	34.963	1.5648	39.746	.044	.020
24	-24	-24†	1 1/2	38.100	1.5015	38.138	1.7523	44.508	.065	.029
26	-26	-26†	1 5/8	41.275	1.6265	41.313	1.8773	47.683	.070	.032
28	-28	-28†	1 3/4	44.450	1.7515	44.488	2.0023	50.858	.075	.034
32	-32	-32†	2	50.800	2.0015	50.838	2.2523	57.208	.085	.039

Add length designation in 1/32 in. increments. (See below.) †Add length designation.

LENGTH DESIGNATORS

Part Number		Length: + 000, -.010 in./ +00, -.25mm																										
PBE( )A	06-382	1/4	9/32	5/16	11/32	3/8	7/16	1/2	9/16	5/8	11/16	3/4	7/8	1	1 1/8	1 1/4	1 3/8	1 1/2	1 5/8	1 3/4	1 7/8	2	2 1/8	2 1/4	2 3/8	2 1/2	2 3/4	3
Dash No.	Dash No.	6.35	7.14	7.94	8.73	9.52	11.11	12.70	14.29	15.88	17.46	19.05	22.22	25.40	28.58	31.75	34.92	38.10	41.28	44.45	47.62	50.80	53.98	57.15	60.32	63.50	69.85	76.20
04	-04	08	09	10	11	12	14																					
05	-05	08	09	10	11	12	14	16	18																			
06	-06	08	09	10	11	12	14	16	18	20	22																	
07	-07	08	09	10	11	12	14	16	18	20	22	24	28															
08	-08	08	09	10	11	12	14	16	18	20	22	24	28															
09	-09	08	09	10	11	12	14	16	18	20	22	24	28	32	36													
10	-10	08	09	10	11	12	14	16	18	20	22	24	28	32	36	40	44											
11	-11	08	09	10	11	12	14	16	18	20	22	24	28	32	36	40	44	48	52									
12	-12	08	09	10	11	12	14	16	18	20	22	24	28	32	36	40	44	48	52									
14	-14	08	09	10	11	12	14	16	18	20	22	24	28	32	36	40	44	48	52									
16	-16	08	09	10	11	12	14	16	18	20	22	24	28	32	36	40	44	48	52	56	60							
18	-18			10	11	12	14	16	18	20	22	24	28	32	36	40	44	48	52	56	60							
20	-20					12	14	16	18	20	22	24	28	32	36	40	44	48	52	56	60	64	68					
22	-22					12	14	16	18	20	22	24	28	32	36	40	44	48	52	56	60	64	68					
24	-24					12	14	16	18	20	22	24	28	32	36	40	44	48	52	56	60	64	68	72	76	80	88	
26	-26							16	18	20	22	24	28	32	36	40	44	48	52	56	60	64	68	72	76	80	88	96
28	-28							16	18	20	22	24	28	32	36	40	44	48	52	56	60	64	68	72	76	80	88	96
32	-32							16	18	20	22	24	28	32	36	40	44	48	52	56	60	64	68	72	76	80	88	96

Bearing configuration	Part number designations for a 0.250 in. bore and 0.250 in. long aluminum journal bearing		
Base P/N (no options)	06-382-04008	PBE04A08	M81934/1-04A008
1st oversize O.D. (0.010 in.)	06-382-04008T	PBE04A08Q	M81934/1-04A008T

©2008, 2011, 2016 RBC Bearings Incorporated. All rights reserved.

M81934/1 CRES SELF-LUBRICATED STRAIGHT JOURNAL BEARING

AS81934 (formerly MIL-B-81934)

- Journal type
- High temperature — low wear
  -65°F to +325°F (-53.9°C to +162.8°C)
- Material and notes: CRES 17-4PH,
  Heat treated, Cond. H-1150 passivated
  Liner: Fibriloid® or "E" Uniflon® qualified to AS81934

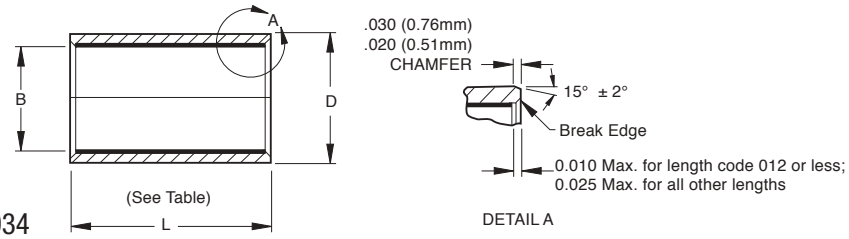

SPECIFICATIONS AND ORDERING INFORMATION

DIMENSIONS — TOLERANCES

Part Numbers CRES PBE( )C Dash No.	06-282 Dash No.	M81934/1( )C Dash No.	Nominal Size		B +.000, - .0010 +.000, -.25		D +.000, - .0005 +.000, -.013		Weight L = 1.000 in. L = 25.4 mm Ref.	
			in.	mm	in.	mm	in.	mm	lbs.-in	kg-mm
04	-04	-04†	1/4	6.350	.2515	6.388	.3760	9.550	.006	.003
05	-05	-05†	5/16	7.938	.3140	7.976	.4386	11.140	.008	.004
06	-06	-06†	3/8	9.525	.3765	9.563	.5012	12.730	.009	.004
07	-07	-07†	7/16	11.112	.4390	11.151	.5638	14.321	.010	.005
08	-08	-08†	1/2	12.700	.5015	12.738	.6265	15.913	.011	.005
09	-09	-09†	9/16	14.288	.5640	14.326	.6892	17.506	.013	.006
10	-10	-10†	5/8	15.875	.6265	15.913	.8142	20.681	.022	.010
11	-11	-11†	11/16	17.462	.6890	17.501	.8767	22.268	.023	.010
12	-12	-12†	3/4	19.050	.7515	19.088	.9393	23.858	.025	.011
14	-14	-14†	7/8	22.225	.8765	22.263	1.0645	27.038	.029	.013
16	-16	-16†	1	25.400	1.0015	25.438	1.1898	38.221	.033	.015
18	-18	-18†	1 1/8	28.575	1.1265	28.613	1.3148	33.396	.037	.017
20	-20	-20†	1 1/4	31.750	1.2515	31.788	1.4398	38.571	.040	.018
22	-22	-22†	1 3/8	34.925	1.3765	34.963	1.5648	39.746	.044	.020
24	-24	-24†	1 1/2	38.100	1.5015	38.138	1.7523	44.508	.065	.029
26	-26	-26†	1 5/8	41.275	1.6265	41.313	1.8773	47.683	.070	.032
28	-28	-28†	1 3/4	44.450	1.7515	44.488	2.0023	50.858	.075	.034
32	-32	-32†	2	50.800	2.0015	50.838	2.2523	57.208	.085	.039

Add length designation in 1/32 in. increments. (See below.) †Add length designation.

LENGTH DESIGNATORS

Part Number		Length: + 000, -.010 in./ +00, -.25mm																										
PBE( )C	06-282	1/4	9/32	5/16	11/32	3/8	7/16	1/2	9/16	5/8	11/16	3/4	7/8	1	1 1/8	1 1/4	1 3/8	1 1/2	1 5/8	1 3/4	1 7/8	2	2 1/8	2 1/4	2 3/8	2 1/2	2 3/4	3
Dash No.	Dash No.	6.35	7.14	7.94	8.73	9.52	11.11	12.70	14.29	15.88	17.46	19.05	22.22	25.40	28.58	31.75	34.92	38.10	41.28	44.45	47.62	50.80	53.98	57.15	60.32	63.50	69.85	76.20
04	-04	08	09	10	11	12	14																					
05	-05	08	09	10	11	12	14	16	18																			
06	-06	08	09	10	11	12	14	16	18	20	22																	
07	-07	08	09	10	11	12	14	16	18	20	22	24	28															
08	-08	08	09	10	11	12	14	16	18	20	22	24	28															
09	-09	08	09	10	11	12	14	16	18	20	22	24	28	32	36													
10	-10	08	09	10	11	12	14	16	18	20	22	24	28	32	36	40	44											
11	-11	08	09	10	11	12	14	16	18	20	22	24	28	32	36	40	44	48	52									
12	-12	08	09	10	11	12	14	16	18	20	22	24	28	32	36	40	44	48	52									
14	-14	08	09	10	11	12	14	16	18	20	22	24	28	32	36	40	44	48	52									
16	-16	08	09	10	11	12	14	16	18	20	22	24	28	32	36	40	44	48	52	56	60							
18	-18			10	11	12	14	16	18	20	22	24	28	32	36	40	44	48	52	56	60							
20	-20					12	14	16	18	20	22	24	28	32	36	40	44	48	52	56	60	64	68					
22	-22					12	14	16	18	20	22	24	28	32	36	40	44	48	52	56	60	64	68					
24	-24					12	14	16	18	20	22	24	28	32	36	40	44	48	52	56	60	64	68	72	76	80	88	
26	-26							16	18	20	22	24	28	32	36	40	44	48	52	56	60	64	68	72	76	80	88	96
28	-28							16	18	20	22	24	28	32	36	40	44	48	52	56	60	64	68	72	76	80	88	96
32	-32							16	18	20	22	24	28	32	36	40	44	48	52	56	60	64	68	72	76	80	88	96

Bearing configuration	Part number designations for a 0.250 in. bore and 0.250 in. long CRES journal bearing		
Base P/N (no options)	06-282-04008	PBE0C08	M81934/1-04C008
Cadmium plating	06-282-04008P	PBE04C08C	M81934/1-04C008P
Zinc Nickel plating	06-282-04008Z	PBE04C08Z	M81934/1-04C008E
1st oversize O.D. (0.010 in.)	06-282-04008T	PBE04C08Q	M81934/1-04C008T

©2008, 2011, 2016 RBC Bearings Incorporated. All rights reserved.

M81934/2 ALUMINUM SELF-LUBRICATED FLANGED JOURNAL BEARING

AS81934/2 (formerly MIL-B-81934)

- Flanged journal type
- High temperature — low wear
  -65°F to +325°F (-53.9°C to +162.8°C)
- Material: Aluminum alloy, Cond. T8511 anodized or chemical-film treated
  Liner: Fibriloid® or "E" Uniflon® qualified to AS81934

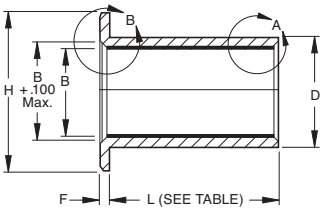

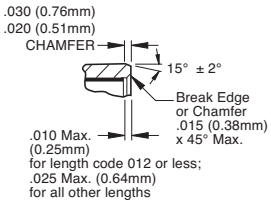

DETAIL A

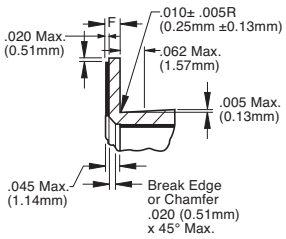

DETAIL B

SPECIFICATIONS AND ORDERING INFORMATION

DIMENSIONS — TOLERANCES

Part Numbers Aluminum FBE( )A Dash No.	07-382 Dash No.	M81934/2( )A Dash No.	Nominal Size		B +.000, - .0010 +.000, -.25		D ±0005 ±013		F +.000, - .005 +.00, -.13		H +.000, - .020 +.00, -.51		Aluminum Journal Weight L = 1.000 in. L = 25.4 mm Ref.		Flange Weight	
			in.	mm	in.	mm	in.	mm	in.	mm	in.	mm	lbs.-in	kg-mm	lbs.-in	kg-mm
04	-04	-04†	1/4	6.350	.2515	6.388	.3760	9.550	.0625	1.588	.750	19.05	.009	.004	.003	.001
05	-05	-05†	5/16	7.938	.3140	7.976	.4386	11.140	.0625	1.588	.812	20.62	.011	.005	.003	.001
06	-06	-06†	3/8	9.525	.3765	9.563	.5012	12.730	.0625	1.588	.875	22.22	.012	.005	.003	.001
07	-07	-07†	7/16	11.112	.4390	11.151	.5638	14.321	.0625	1.588	.937	23.80	.013	.006	.003	.001
08	-08	-08†	1/2	12.700	.5015	12.738	.6265	15.913	.0625	1.588	1.000	25.40	.015	.007	.004	.002
09	-09	-09†	9/16	14.288	.5640	14.326	.6892	17.506	.0625	1.588	1.125	28.58	.017	.008	.004	.002
10	-10	-10†	5/8	15.875	.6265	15.913	.8142	20.681	.0625	1.588	1.250	31.75	.027	.012	.005	.002
11	-11	-11†	11/16	17.462	.6890	17.501	.8767	22.268	.0625	1.588	1.375	34.92	.030	.014	.007	.003
12	-12	-12†	3/4	19.050	.7515	19.088	.9393	23.858	.0625	1.588	1.500	38.10	.034	.015	.009	.004
14	-14	-14†	7/8	22.225	.8765	22.263	1.0645	27.038	.0625	1.588	1.625	41.28	.038	.017	.009	.004
16	-16	-16†	1	25.400	1.0015	25.438	1.1898	30.221	.0625	1.588	1.750	44.45	.043	.020	.010	.005
18	-18	-18†	1 1/8	28.575	1.1265	28.613	1.3148	33.396	.0937	2.380	1.875	47.62	.051	.023	.014	.006
20	-20	-20†	1 1/4	31.750	1.2515	31.788	1.4398	36.571	.0937	2.380	2.000	50.80	.058	.026	.018	.008
22	-22	-22†	1 3/8	34.925	1.3765	34.963	1.5648	39.746	.0937	2.380	2.125	53.98	.063	.029	.019	.009
24	-24	-24†	1 1/2	38.100	1.5015	38.138	1.7523	44.508	.0937	2.380	2.250	57.15	.084	.038	.018	.008
26	-26	-26†	1 5/8	41.275	1.6265	41.313	1.8773	47.683	.0937	2.380	2.375	60.32	.090	.041	.020	.009
28	-28	-28†	1 3/4	44.450	1.7515	44.488	2.0023	50.858	.0937	2.380	2.500	63.50	.098	.044	.023	.010
32	-32	-32†	2	50.800	2.0015	50.838	2.2523	57.208	.0937	2.380	2.750	69.85	.111	.050	.026	.012

Add length designation in 1/32 in. increments. (See below.) †Add length designation.

LENGTH DESIGNATORS

Part Number FBE( )A Dash No.	07-382 Dash No.	1/4 6.35	9/32 7.14	5/16 7.94	11/32 8.73	3/8 9.52	7/16 11.11	1/2 12.70	9/16 14.29	5/8 15.88	11/16 17.46	3/4 19.05	7/8 22.22	1 25.40	1 1/8 28.58	1 1/4 31.75	1 3/8 34.92	1 1/2 38.10	1 5/8 41.28	1 3/4 44.45	1 7/8 47.62	2 50.80	2 1/8 53.98	2 1/4 57.15	2 3/8 60.32	2 1/2 63.50	2 3/4 69.85	3 76.20
		Length: + 000, -.010 in./ +00, -.25mm																										
04	-04	08	09	10	11	12	14																					
05	-05	08	09	10	11	12	14	16	18																			
06	-06	08	09	10	11	12	14	16	18	20	22																	
07	-07	08	09	10	11	12	14	16	18	20	22	24	28															
08	-08	08	09	10	11	12	14	16	18	20	22	24	28															
09	-09	08	09	10	11	12	14	16	18	20	22	24	28	32	36													
10	-10	08	09	10	11	12	14	16	18	20	22	24	28	32	36	40	44											
11	-11	08	09	10	11	12	14	16	18	20	22	24	28	32	36	40	44	48	52									
12	-12	08	09	10	11	12	14	16	18	20	22	24	28	32	38	40	44	48	52									
14	-14	08	09	10	11	12	14	16	18	20	22	24	28	32	36	40	44	48	52									
16	-16	08	09	10	11	12	14	16	18	20	22	24	28	32	36	40	44	48	52	56	60							
18	-18			10	11	12	14	16	18	20	22	24	28	32	36	40	44	48	52	56	60							
20	-20					12	14	16	18	20	22	24	28	32	36	40	44	48	52	56	60	64	68					
22	-22					12	14	16	18	20	22	24	28	32	36	40	44	48	52	56	60	64	68					
24	-24					12	14	16	18	20	22	24	28	32	36	40	44	48	52	56	60	64	68	72	76	80	88	
26	-26							16	18	20	22	24	28	32	36	40	44	48	52	56	60	64	68	72	76	80	88	96
28	-28							16	18	20	22	24	28	32	36	40	44	48	52	56	60	64	68	72	76	80	88	96
32	-32							16	18	20	22	24	28	32	36	40	44	48	52	56	60	64	68	72	76	80	88	96

Bearing configuration	Part number designations for a 0.250 in. bore and 0.250 in. long aluminum journal bearing		
Base P/N (no options)	07-382-04008	FBE04A08	M81934/2-04A008
1st oversize O.D. (0.010 in.)	07-382-04008T	FBE04A08Q	M81934/2-04A008T
2nd oversize O.D. (0.020 in.)	07-382-04008U	FBE04A08U	M81934/2-04A008U

©2008, 2011, 2016 RBC Bearings Incorporated. All rights reserved.

M81934/2 CRES SELF-LUBRICATED FLANGED JOURNAL BEARING

AS81934/2 (formerly MIL-B-81934)

- Flanged journal type
- High temperature — low wear
  -65°F to +325°F. (-53.9°C to +162.8°C)
- Material: CRES 17-4PH, heat treated, Cond. H-1150 passivated
  Liner: Fibriloid® or "E" Uniflon® qualified to AS81934

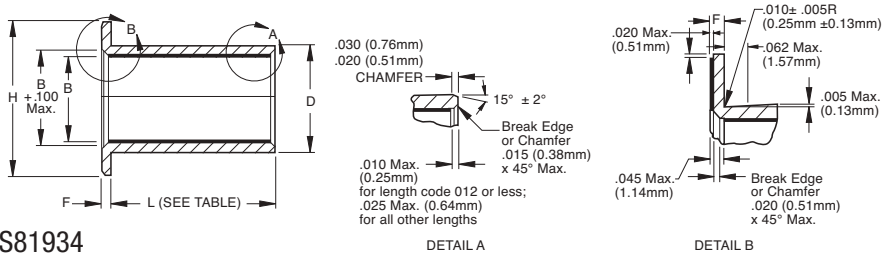

SPECIFICATIONS AND ORDERING INFORMATION

DIMENSIONS — TOLERANCES

Part Numbers CRES FBE( )C Dash No.	07-282 Dash No.	M81934/2( )C Dash No.	Nominal Size		B +.000, - .0010 +.000, -.25		D +.000, - .0005 +.000, -.013		F +.000, - .005 +.00, -.13		H +.000, - .020 +.00, -.51		CRES Journal Weight L = 1.000 in. L = 25.4 mm Ref.		Flange Weight	
			in.	mm	in.	mm	in.	mm	in.	mm	in.	mm	lbs.-in	kg-mm	lbs.-in	kg-mm
04	-04	-04†	1/4	6.350	.2515	6.388	.3760	9.550	.0625	1.588	.750	19.05	.009	.004	.003	.001
05	-05	-05†	5/16	7.938	.3140	7.976	.4386	11.140	.0625	1.588	.812	20.62	.011	.005	.003	.001
06	-06	-06†	3/8	9.525	.3765	9.563	.5012	12.730	.0625	1.588	.875	22.22	.012	.005	.003	.001
07	-07	-07†	7/16	11.112	.4390	11.151	.5638	14.321	.0625	1.588	.937	23.80	.013	.006	.003	.001
08	-08	-08†	1/2	12.700	.5015	12.738	.6265	15.913	.0625	1.588	1.000	25.40	.015	.007	.004	.002
09	-09	-09†	9/16	14.288	.5640	14.326	.6892	17.506	.0625	1.588	1.125	28.58	.017	.008	.004	.002
10	-10	-10†	5/8	15.875	.6265	15.913	.8142	20.681	.0625	1.588	1.250	31.75	.027	.012	.005	.002
11	-11	-11†	11/16	17.462	.6890	17.501	.8767	22.268	.0625	1.588	1.375	34.92	.030	.014	.007	.003
12	-12	-12†	3/4	19.050	.7515	19.088	.9393	23.858	.0625	1.588	1.500	38.10	.034	.015	.009	.004
14	-14	-14†	7/8	22.225	.8765	22.263	1.0645	27.038	.0625	1.588	1.625	41.28	.038	.017	.009	.004
16	-16	-16†	1	25.400	1.0015	25.438	1.1898	30.221	.0625	1.588	1.750	44.45	.043	.020	.010	.005
18	-18	-18†	1 1/8	28.575	1.1265	28.613	1.3148	33.396	.0937	2.380	1.875	47.62	.051	.023	.014	.006
20	-20	-20†	1 1/4	31.750	1.2515	31.788	1.4398	36.571	.0937	2.380	2.000	50.80	.058	.026	.018	.008
22	-22	-22†	1 3/8	34.925	1.3765	34.963	1.5648	39.746	.0937	2.380	2.125	53.98	.063	.029	.019	.009
24	-24	-24†	1 1/2	38.100	1.5015	38.138	1.7523	44.508	.0937	2.380	2.250	57.15	.084	.038	.018	.008
26	-26	-26†	1 5/8	41.275	1.6265	41.313	1.8773	47.683	.0937	2.380	2.375	60.32	.090	.041	.020	.009
28	-28	-28†	1 3/4	44.450	1.7515	44.488	2.0023	50.858	.0937	2.380	2.500	63.50	.098	.044	.023	.010
32	-32	-32†	2	50.800	2.0015	50.838	2.2523	57.208	.0937	2.380	2.750	69.85	.111	.050	.026	.012

Add length designation in 1/32 in. increments. (See below.) †Add length designation.

LENGTH DESIGNATORS

Part Number FBE( )C Dash No.	07-282 Dash No.	1/4 6.35	9/32 7.14	5/16 7.94	11/32 8.73	3/8 9.52	7/16 11.11	1/2 12.70	9/16 14.29	5/8 15.88	11/16 17.46	3/4 19.05	7/8 22.22	1 25.40	1 1/8 28.58	1 1/4 31.75	1 3/8 34.92	1 1/2 38.10	1 5/8 41.28	1 3/4 44.45	1 7/8 47.62	2 50.80	2 1/8 53.98	2 1/4 57.15	2 3/8 60.32	2 1/2 63.50	2 3/4 69.85	3 76.20
		Length: + 000, -.010 in./ +00, -.25mm																										
04	-04	08	09	10	11	12	14																					
05	-05	08	09	10	11	12	14	16	18																			
06	-06	08	09	10	11	12	14	16	18	20	22																	
07	-07	08	09	10	11	12	14	16	18	20	22	24	28															
08	-08	08	09	10	11	12	14	16	18	20	22	24	28															
09	-09	08	09	10	11	12	14	16	18	20	22	24	28	32	36													
10	-10	08	09	10	11	12	14	16	18	20	22	24	28	32	36	40	44											
11	-11	08	09	10	11	12	14	16	18	20	22	24	28	32	36	40	44	48	52									
12	-12	08	09	10	11	12	14	16	18	20	22	24	28	32	38	40	44	48	52									
14	-14	08	09	10	11	12	14	16	18	20	22	24	28	32	36	40	44	48	52									
16	-16	08	09	10	11	12	14	16	18	20	22	24	28	32	36	40	44	48	52	56	60							
18	-18			10	11	12	14	16	18	20	22	24	28	32	36	40	44	48	52	56	60							
20	-20					12	14	16	18	20	22	24	28	32	36	40	44	48	52	56	60	64	68					
22	-22					12	14	16	18	20	22	24	28	32	36	40	44	48	52	56	60	64	68					
24	-24					12	14	16	18	20	22	24	28	32	36	40	44	48	52	56	60	64	68	72	76	80	88	
26	-26							16	18	20	22	24	28	32	36	40	44	48	52	56	60	64	68	72	76	80	88	96
28	-28							16	18	20	22	24	28	32	36	40	44	48	52	56	60	64	68	72	76	80	88	96
32	-32							16	18	20	22	24	28	32	36	40	44	48	52	56	60	64	68	72	76	80	88	96

Bearing configuration	Part number designations for a 0.250 in. bore and 0.250 in. long CRES journal bearing		
Base P/N (no options)	07-282-04008	FBE04C08	M81934/2-04C008
Cadmium plating	07-282-04008P	FBE04C08C	M81934/2-04C008P
Zinc Nickel plating	07-282-04008Z	FBE04C08Z	M81934/2-04C008E
1st oversize O.D. (0.010 in.)	07-282-04008T	FBE04C08Q	M81934/2-04C008T
2nd oversize O.D. (0.020 in.)	07-282-04008U	FBE04C08U	M81934/2-04C008U

©2008, 2011, 2016 RBC Bearings Incorporated. All rights reserved.

EN 2285 ALUMINUM SELF-LUBRICATED STRAIGHT JOURNAL BEARING

European Standards

- Bushes (journal) type
- High temperature — low wear
  -55°C to +163°C (-65°F to +325°F)
- Material and notes:
  Aluminum alloy, Cond. T8511 anodized per MIL-A-8625, according to EN 2086, EN 2701 or EN 2704. Anodized per EN 2101A or EN 2284A
  Liner: Fibriloid® or "E" Uniflon® qualified to AS81934, according to EN 2311

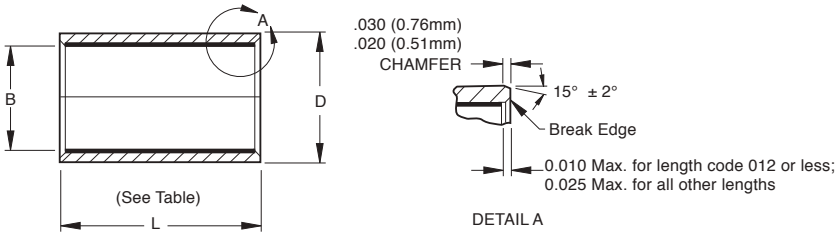

SPECIFICATIONS AND ORDERING INFORMATION

EN 2285 Aluminum Self-lubricated Straight Journal Bearing

B		D		Length																
nom	tol	nom	tol p6	6	8	10	12	15	16	18	20	22	25	28	30	32	35	40	45	50
				L -0.1 -0.4																
				Mass in kg/1000 pcs																
6	+0.022 +0.004	10	+0.024 -0.015	0.9																
8	+0.027 +0.005	12	+0.029 +0.018	1.1	1.4															
10	+0.027 +0.005	14	+0.029 +0.018	1.3	1.7	2.1														
12	+0.027 +0.005	16	+0.029 +0.018	1.5	2.0	2.5	3.0													
15	+0.033 +0.006	19	+0.035 +0.022		2.4	3.0	3.6	4.6												
16	+0.033 +0.006	20	+0.035 +0.022		2.6	3.2	3.8	4.8	5.1											
18	+0.033 +0.006	22	+0.035 +0.022			3.6	4.3	5.5		6.6										
20	+0.04 +0.007	25	+0.035 +0.022			5.0	6.0	7.5			10.0									
22	+0.04 +0.007	26	+0.035 +0.022				5.1	6.4			8.5	9.4								
25	+0.04 +0.007	30	+0.035 +0.022				7.4	9.2			12.5	13.5	15.3							
28	+0.04 +0.007	34	+0.042 +0.026					12.4			16.6	18.2	20.7	23.2						
30	+0.04 +0.007	36	+0.042 +0.026					13.3			17.7	19.5	22.1		26.5					
32	+0.048 +0.009	38	+0.042 +0.026					14.0			18.7	20.5	23.5		28.0	29.9				
35	+0.048 +0.009	42	+0.042 +0.026								24.0	26.5	30.1		36.0		42.2			
40	+0.048 +0.009	48	+0.051 +0.032								31.0		39.0		46.9		54.9	62.8		
45	+0.048 +0.009	52	+0.051 +0.032										38.0		45.6		53.1	60.7	68.2	
50	+0.048 +0.009	58	+0.051 +0.032										48.7		58.2		67.7	77.3	86.8	96.4

Dimensions in millimeters

Load Calculations

Static radial limit load = 0.206B x (L-2) kN

Permissible dynamic load = Static radial limit load / 1.2 kN

Where:

B = Bush bore

L = Bush length

©2008, 2011, 2016 RBC Bearings Incorporated. All rights reserved.

EN 2286 ALUMINUM SELF-LUBRICATED FLANGED JOURNAL BEARING

European Standards

- Flanged bushes (journals) type
- High temperature — low wear
  -55°C to +163°C (-65°F to +325°F)
- Material and notes:
  Aluminum alloy, Cond. T8511 anodized per MIL-A-8625, according to EN 2086, EN 2701 or EN 2704. Anodized per EN 2101A or EN 2284A
  Liner: Fibriloid® or "E" Uniflon® qualified to AS81934, according to EN 2311

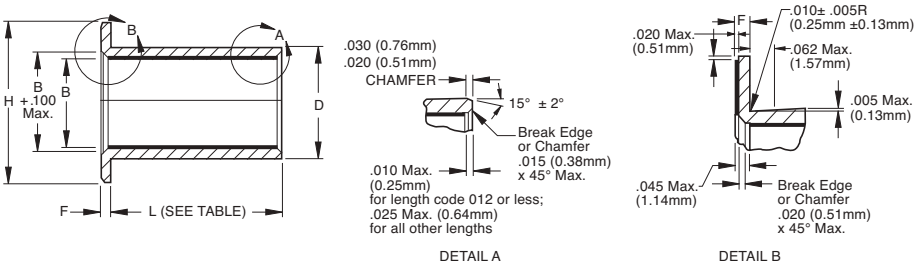

SPECIFICATIONS AND ORDERING INFORMATION

EN 2286 Flanged Series Aluminum

B		D		H	F	R	C	Length																
nom	tol	nom	tol p6	+0 -0.25	+0 -0.15		max	6	8	10	12	15	16	18	20	22	25	28	30	32	35	40	45	50
																	L	-0.1 -0.4						
								Mass in kg/1000 pcs																
6	+0.022 +0.004	10	+0.024 -0.015	12	1.5	0.1 to 0.4	0.9	1.0																
8	+0.027 +0.005	12	+0.029 +0.018	14	1.5	0.1 to 0.4	0.9	1.3	1.6															
10	+0.027 +0.005	14	+0.029 +0.018	16	1.5	0.1 to 0.4	0.9	1.5	1.9	2.3														
12	+0.033 +0.006	16	+0.029 +0.018	22	1.5	0.5 to 0.8	0.9	2.3	2.7	3.2	3.7													
15	+0.033 +0.006	19	+0.035 +0.022	25	1.5	0.5 to 0.8	0.9		3.3	3.8	4.5	5.0												
16	+0.033 +0.006	20	+0.035 +0.022	26	1.5	0.5 to 0.8	0.9		3.4	4.1	4.7	5.7	6.0											
18	+0.033 +0.006	22	+0.035 +0.022	28	1.5	0.5 to 0.8	1.2			4.6	5.3	6.3		7.4										
20	+0.040 +0.007	25	+0.035 +0.022	30	1.5	0.5 to 0.8	1.2			5.9	6.9	8.4			11.0									
22	+0.040 +0.007	26	+0.035 +0.022	32	1.5	0.5 to 0.8	1.2				6.3	7.6			9.7	10.6								
25	+0.040 +0.007	30	+0.035 +0.022	35	1.5	0.5 to 0.8	1.2				8.4	10.3			13.3	14.5	16.4							
28	+0.040 +0.007	34	+0.042 +0.026	40	2.5	0.5 to 0.8	1.2					14.9			19.0	20.6	23.1	25.4						
30	+0.040 +0.007	36	+0.042 +0.026	42	2.5	0.5 to 0.8	1.2					15.8			20.3	22.0	24.6		29.1					
32	+0.048 +0.009	38	+0.042 +0.026	44	2.5	0.5 to 0.8	1.2					16.7			21.4	23.3	26.1		30.8	32.6				
35	+0.048 +0.009	42	+0.042 +0.026	47	2.5	0.5 to 0.8	1.2								26.5	28.9	32.5		38.5		44.5			
40	+0.048 +0.009	48	+0.051 +0.032	52	2.5	0.5 to 0.8	1.2								33.6		41.4		49.0		57.1	64.0		
45	+0.048 +0.009	52	+0.051 +0.032	57	2.5	0.5 to 0.8	1.2										40.8		48.3		56.0	63.5	71.0	
50	+0.048 +0.009	58	+0.051 +0.032	62	2.5	0.5 to 0.8	1.2										50.7		60.3		69.9	79.6	79.6	98.8

Dimensions in millimeters

Load Calculations

Static radial limit load = 0.206B x (L- 1.2 - Rmax - Fmax) kN

Static axial limit load = 0.16[(A-1.5)2 - (B+2.5)2] kN

Permissible dynamic load = Static radial limit load / 1.2 kN

Where:

B = Bush bore diameter

L = Bush length

R = Corner radius

F = Flange width

A = Flange diameter

©2008, 2011, 2016 RBC Bearings Incorporated. All rights reserved.

EN 2287 CRES SELF-LUBRICATED STRAIGHT JOURNAL BEARING

European Standards

- Bushes (journal) type
- High temperature — low wear
  -55°C to +163°C (-65°F to +325°F)
- Material and notes:
  CRES 17-4PH, heat treated according to EN 3161 or EN 3490
  Liner: Fibriloid® or "E" Uniflon® qualified to AS81934, according to EN 2311

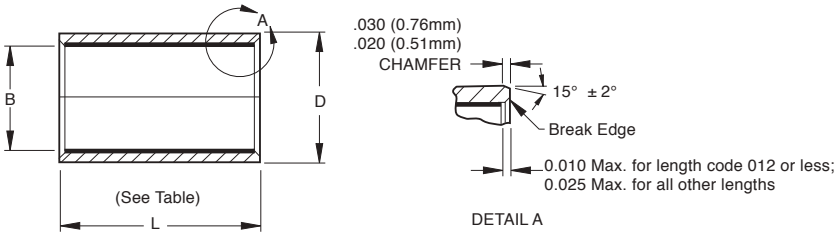

SPECIFICATIONS AND ORDERING INFORMATION

EN 2287 Plain Series CRES

B		D		Length																
nom	tol	nom	tol p6	6	8	10	12	15	16	18	20	22	25	28	30	32	35	40	45	50
				L -0.1 -0.4																
				Mass in kg/1000 pcs																
6	+0.022 +0.004	10	+0.024 -0.015	2.4																
8	+0.027 +0.005	12	+0.029 +0.018	3.0	4.0															
10	+0.027 +0.005	14	+0.029 +0.018	3.5	4.7	5.9														
12	+0.027 +0.005	16	+0.029 +0.018	4.1	5.5	6.9	8.3													
15	+0.033 +0.006	19	+0.035 +0.022		6.7	8.4	10.1	12.6												
16	+0.033 +0.006	20	+0.035 +0.022		7.1	8.9	10.7	13.4	14.3											
18	+0.033 +0.006	22	+0.035 +0.022			9.9	11.8	14.8		17.8										
20	+0.04 +0.007	25	+0.035 +0.022			13.9	16.7	20.9			27.8									
22	+0.04 +0.007	26	+0.035 +0.022				14.2	17.8			23.7	26.1								
25	+0.04 +0.007	30	+0.035 +0.022				20.4	25.5			34.0	37.4	42.5							
28	+0.04 +0.007	34	+0.042 +0.026					34.5			46.0	50.6	57.5	64.4						
30	+0.04 +0.007	36	+0.042 +0.026					36.7			49.0	53.8	61.2		73.4					
32	+0.048 +0.009	38	+0.042 +0.026					39.0			51.9	57.1	64.9		77.9	83.1				
35	+0.048 +0.009	42	+0.042 +0.026								66.6	73.5	83.6		100.3		117.0			
40	+0.048 +0.009	48	+0.051 +0.032								87.0		108.8		130.0		152.2	174.0		
45	+0.048 +0.009	52	+0.051 +0.032										105.0		126.0		147.0	168.0	189.0	
50	+0.048 +0.009	58	+0.051 +0.032										133.5		160.0		186.9	214.0	240.3	267.0

Dimensions in millimeters

Load Calculations

Static radial limit load = 0.43B x (L-2) kN

Permissible dynamic load = Static radial limit load / 2.5 kN

Where:

B = Bush bore

L = Bush length

©2008, 2011, 2016 RBC Bearings Incorporated. All rights reserved.

EN 2288 CRES SELF-LUBRICATED FLANGED JOURNAL BEARING

European Standards

- Flanged bushes (journals) type
- High temperature — low wear
  -55°C to +163°C (-65°F to +325°F)
- Material and notes:
  CRES 17-4PH, heat treated according to EN 3161 or EN 3490
  Liner: Fibriloid® or "E" Uniflon® qualified to AS81934, according to EN 2311

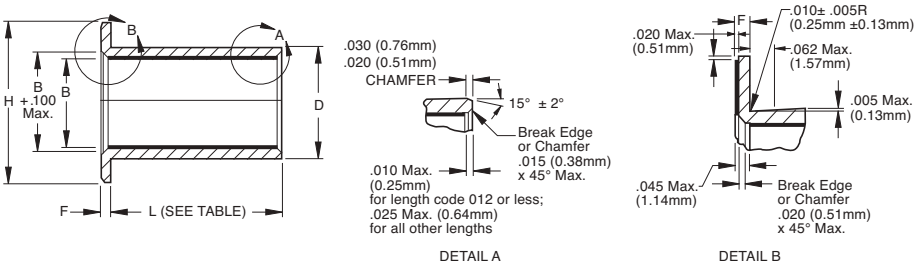

SPECIFICATIONS AND ORDERING INFORMATION

EN 2288 Flanged Series CRES

B		D		H	F	R	C	Length																
nom	tol	nom	tol p6	+0 -0.25	+0 -0.15		max	6	8	10	12	15	16	18	20	22	25	28	30	32	35	40	45	50
																	L	-0.1 -0.4						
								Mass in kg/1000 pcs																
6	+0.022 +0.004	10	+0.024 -0.015	12	1.5	0.1 to 0.4	0.9	2.8																
8	+0.027 +0.005	12	+0.029 +0.018	14	1.5	0.1 to 0.4	0.9	3.5	4.4															
10	+0.027 +0.005	14	+0.029 +0.018	16	1.5	0.1 to 0.4	0.9	4.1	5.3	6.5														
12	+0.033 +0.006	16	+0.029 +0.018	22	1.5	0.5 to 0.8	0.9	6.3	7.6	9.0	10.4													
15	+0.033 +0.006	19	+0.035 +0.022	25	1.5	0.5 to 0.8	0.9		9.2	10.8	12.5	15.6												
16	+0.033 +0.006	20	+0.035 +0.022	26	1.5	0.5 to 0.8	0.9		9.7	11.5	13.2	15.9	16.8											
18	+0.033 +0.006	22	+0.035 +0.022	28	1.5	0.5 to 0.8	1.2			12.7	14.7	17.6		20.8										
20	+0.040 +0.007	25	+0.035 +0.022	30	1.5	0.5 to 0.8	1.2			16.5	19.2	23.4			30.4									
22	+0.040 +0.007	26	+0.035 +0.022	32	1.5	0.5 to 0.8	1.2				17.5	21.0			27.0	29.3								
25	+0.040 +0.007	30	+0.035 +0.022	35	1.5	0.5 to 0.8	1.2				23.4	28.5			37.0	40.4	45.5							
28	+0.040 +0.007	34	+0.042 +0.026	40	2.5	0.5 to 0.8	1.2					41.4			52.8	57.4	64.3	71.2						
30	+0.040 +0.007	36	+0.042 +0.026	42	2.5	0.5 to 0.8	1.2					43.9			56.2	61.1	68.4		80.7					
32	+0.048 +0.009	38	+0.042 +0.026	44	2.5	0.5 to 0.8	1.2					46.5			59.5	61.7	72.5		85.5	90.7				
35	+0.048 +0.009	42	+0.042 +0.026	47	2.5	0.5 to 0.8	1.2								73.5	80.2	90.2		106.8		123.5			
40	+0.048 +0.009	48	+0.051 +0.032	52	2.5	0.5 to 0.8	1.2								93.2		115.0		136.0		158.5	180.0		
45	+0.048 +0.009	52	+0.051 +0.032	57	2.5	0.5 to 0.8	1.2										113.3		138.3		155.3	176.3	197.3	
50	+0.048 +0.009	58	+0.051 +0.032	62	2.5	0.5 to 0.8	1.2										140.9		167.6		194.3	221	247.4	274.4

Dimensions in millimeters

©2008, 2011, 2016 RBC Bearings Incorporated. All rights reserved.

HIGH-TEMPERATURE SELF-LUBRICATED FLANGED JOURNAL BEARING

- Flanged journal type
- High temperature — low wear
  -65°F to +600°F
  (-53.9°C to +315°C)
- Material:
  CRES A-286
  Liner: Fabroid® X

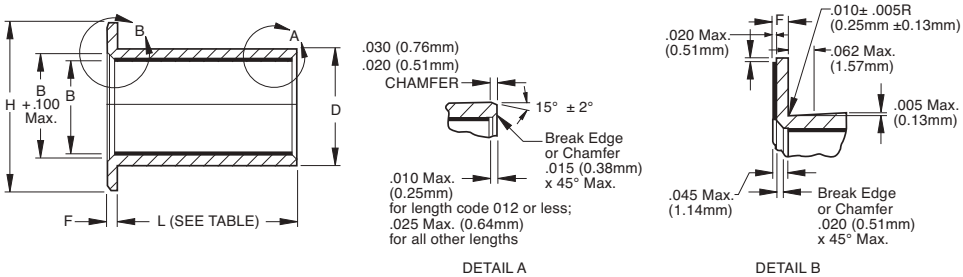

SPECIFICATIONS AND ORDERING INFORMATION

DIMENSIONS — TOLERANCES

Part Number	Nominal Size		B		D		F		H		A286 Journal Weight L = 1.000 in. L = 25.4 mm Ref.		A286 Flange Weight	
			+.000, - .0010 +.000, -.25		±0005 ±013		+.000, - .005 +.00, -.13		+.000, - .020 +.00, -.51					
	in.	mm	in.	mm	in.	mm	in.	mm	in.	mm	lbs.-in	kg-mm	lbs.-in	kg-mm
07-450-04-0(xx)†	1/4	6.350	.2515	6.388	.3760	9.550	.0625	1.588	.750	19.05	.009	.004	.003	.001
07-450-05-0(xx)†	5/16	7.938	.3140	7.976	.4386	11.140	.0625	1.588	.812	20.62	.011	.005	.003	.001
07-450-06-0(xx)†	3/8	9.525	.3765	9.563	.5012	12.730	.0625	1.588	.875	22.22	.012	.005	.003	.001
07-450-07-0(xx)†	7/16	11.112	.4390	11.151	.5638	14.321	.0625	1.588	.937	23.80	.013	.006	.003	.001
07-450-08-0(xx)†	1/2	12.700	.5015	12.738	.6265	15.913	.0625	1.588	1.000	25.40	.015	.007	.004	.002
07-450-09-0(xx)†	9/16	14.288	.5640	14.326	.6892	17.506	.0625	1.588	1.125	28.58	.017	.008	.004	.002
07-450-10-0(xx)†	5/8	15.875	.6265	15.913	.8142	20.681	.0625	1.588	1.250	31.75	.027	.012	.005	.002
07-450-11-0(xx)†	11/16	17.462	.6890	17.501	.8767	22.268	.0625	1.588	1.375	34.92	.030	.014	.007	.003
07-450-12-0(xx)†	3/4	19.050	.7515	19.088	.9393	23.858	.0625	1.588	1.500	38.10	.034	.015	.009	.004
07-450-14-0(xx)†	7/8	22.225	.8765	22.263	1.0645	27.038	.0625	1.588	1.625	41.28	.038	.017	.009	.004
07-450-16-0(xx)†	1	25.400	1.0015	25.438	1.1898	30.221	.0625	1.588	1.750	44.45	.043	.020	.010	.005
07-450-18-0(xx)†	1 1/8	28.575	1.1265	28.613	1.3148	33.396	.0937	2.380	1.875	47.62	.051	.023	.014	.006
07-450-20-0(xx)†	1 1/4	31.750	1.2515	31.788	1.4398	36.571	.0937	2.380	2.000	50.80	.058	.026	.018	.008
07-450-22-0(xx)†	1 3/8	34.925	1.3765	34.963	1.5648	39.746	.0937	2.380	2.125	53.98	.063	.029	.019	.009
07-450-24-0(xx)†	1 1/2	38.100	1.5015	38.138	1.7523	44.508	.0937	2.380	2.250	57.15	.084	.038	.018	.008
07-450-26-0(xx)†	1 5/8	41.275	1.6265	41.313	1.8773	47.683	.0937	2.380	2.375	60.32	.090	.041	.020	.009
07-450-28-0(xx)†	1 3/4	44.450	1.7515	44.488	2.0023	50.858	.0937	2.380	2.500	63.50	.098	.044	.023	.010
07-450-32-0(xx)†	2	50.800	2.0015	50.838	2.2523	57.208	.0937	2.380	2.750	69.85	.111	.050	.026	.012

Add length designation in 1/32 in. increments. (See below.)

†Add length designations in 2 digits.

LENGTH DESIGNATORS

Part Number	Length: + 000, -.010 in./ +00, -.25mm																										
	1/4	9/32	5/16	11/32	3/8	7/16	1/2	9/16	5/8	11/16	3/4	7/8	1	1 1/8	1 1/4	1 3/8	1 1/2	1 5/8	1 3/4	1 7/8	2	2 1/8	2 1/4	2 3/8	2 1/2	2 3/4	3
	6.35	7.14	7.94	8.73	9.52	11.11	12.70	14.29	15.88	17.46	19.05	22.22	25.40	28.58	31.75	34.92	38.10	41.28	44.45	47.62	50.80	53.98	57.15	60.32	63.50	69.85	76.20
07-450-04-0(xx)	08	09	10	11	12	14																					
07-450-05-0(xx)	08	09	10	11	12	14	16	18																			
07-450-06-0(xx)	08	09	10	11	12	14	16	18	20	22																	
07-450-07-0(xx)	08	09	10	11	12	14	16	18	20	22	24	28															
07-450-08-0(xx)	08	09	10	11	12	14	16	18	20	22	24	28															
07-450-09-0(xx)	08	09	10	11	12	14	16	18	20	22	24	28	32	36													
07-450-10-0(xx)	08	09	10	11	12	14	16	18	20	22	24	28	32	36	40	44											
07-450-11-0(xx)	08	09	10	11	12	14	16	18	20	22	24	28	32	36	40	44	48	52									
07-450-12-0(xx)	08	09	10	11	12	14	16	18	20	22	24	28	32	38	40	44	48	52									
07-450-14-0(xx)	08	09	10	11	12	14	16	18	20	22	24	28	32	36	40	44	48	52									
07-450-16-0(xx)	08	09	10	11	12	14	16	18	20	22	24	28	32	36	40	44	48	52	56	60							
07-450-18-0(xx)			10	11	12	14	16	18	20	22	24	28	32	36	40	44	48	52	56	60							
07-450-20-0(xx)					12	14	16	18	20	22	24	28	32	36	40	44	48	52	56	60	64	68					
07-450-22-0(xx)					12	14	16	18	20	22	24	28	32	36	40	44	48	52	56	60	64	68					
07-450-24-0(xx)					12	14	16	18	20	22	24	28	32	36	40	44	48	52	56	60	64	68	72	76	80	88	
07-450-26-0(xx)							16	18	20	22	24	28	32	36	40	44	48	52	56	60	64	68	72	76	80	88	96
07-450-28-0(xx)							16	18	20	22	24	28	32	36	40	44	48	52	56	60	64	68	72	76	80	88	96
07-450-32-0(xx)							16	18	20	22	24	28	32	36	40	44	48	52	56	60	64	68	72	76	80	88	96

©2008, 2011, 2016 RBC Bearings Incorporated. All rights reserved.

HIGH-TEMPERATURE SELF-LUBRICATED STRAIGHT JOURNAL BEARING

- Journal type
- High temperature — low wear
  -65°F to +600°F
  (-53.9°C to +315°C)
- Material:
  CRES A-286
  Liner: Fabroid® X

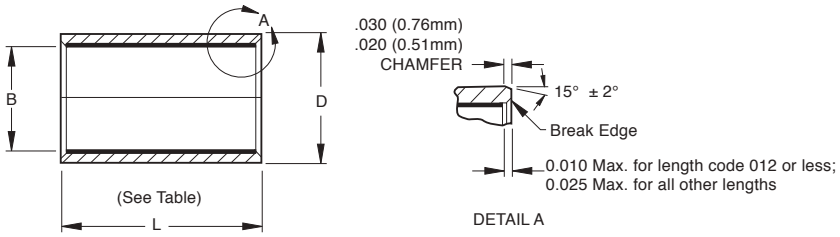

SPECIFICATIONS AND ORDERING INFORMATION

DIMENSIONS — TOLERANCES

Part Number	Nominal Size		B +.000, - .0010 +.000, -.25		D ±0005 ±013		Journal Weight L = 1.000 in. L = 25.4 mm Ref.	
	in.	mm	in.	mm	in.	mm	lbs.-in	kg-mm
06-450-04-(xxx)†	1/4	6.350	.2515	6.388	.3760	9.550	.009	.004
06-450-05-(xxx)†	5/16	7.938	.3140	7.976	.4386	11.140	.011	.005
06-450-06-(xxx)†	3/8	9.525	.3765	9.563	.5012	12.730	.012	.005
06-450-07-(xxx)†	7/16	11.112	.4390	11.151	.5638	14.321	.013	.006
06-450-08-(xxx)†	1/2	12.700	.5015	12.738	.6265	15.913	.015	.007
06-450-09-(xxx)†	9/16	14.288	.5640	14.326	.6892	17.506	.017	.008
06-450-10-(xxx)†	5/8	15.875	.6265	15.913	.8142	20.681	.027	.012
06-450-11-(xxx)†	11/16	17.462	.6890	17.501	.8767	22.268	.030	.014
06-450-12-(xxx)†	3/4	19.050	.7515	19.088	.9393	23.858	.034	.015
06-450-14-(xxx)†	7/8	22.225	.8765	22.263	1.0645	27.038	.038	.017
06-450-16-(xxx)†	1	25.400	1.0015	25.438	1.1898	30.221	.043	.020
06-450-18-(xxx)†	1 1/8	28.575	1.1265	28.613	1.3148	33.396	.051	.023
06-450-20-(xxx)†	1 1/4	31.750	1.2515	31.788	1.4398	36.571	.058	.026
06-450-22-(xxx)†	1 3/8	34.925	1.3765	34.963	1.5648	39.746	.063	.029
06-450-24-(xxx)†	1 1/2	38.100	1.5015	38.138	1.7523	44.508	.084	.038
06-450-26-(xxx)†	1 5/8	41.275	1.6265	41.313	1.8773	47.683	.090	.041
06-450-28-(xxx)†	1 3/4	44.450	1.7515	44.488	2.0023	50.858	.098	.044
06-450-32-(xxx)†	2	50.800	2.0015	50.838	2.2523	57.208	.111	.050

Add length designation in 1/32 in. increments. (See below.)

†Add length designations in 3 digits.

LENGTH DESIGNATORS

Part Number	Length: + 000, -.010 in./ +00, -.25mm																											
	1/4	9/32	5/16	11/32	3/8	7/16	1/2	9/16	5/8	11/16	3/4	7/8	1	1 1/8	1 1/4	1 3/8	1 1/2	1 5/8	1 3/4	1 7/8	2	2 1/8	2 1/4	2 3/8	2 1/2	2 3/4	3
	6.35	7.14	7.94	8.73	9.52	11.11	12.70	14.29	15.88	17.46	19.05	22.22	25.40	28.58	31.75	34.92	38.10	41.28	44.45	47.62	50.80	53.98	57.15	60.32	63.50	69.85	76.20
06-450-04-0(xx)	08	09	10	11	12	14																					
06-450-05-0(xx)	08	09	10	11	12	14	16	18																			
06-450-06-0(xx)	08	09	10	11	12	14	16	18	20	22																	
06-450-07-0(xx)	08	09	10	11	12	14	16	18	20	22	24	28															
06-450-08-0(xx)	08	09	10	11	12	14	16	18	20	22	24	28															
06-450-09-0(xx)	08	09	10	11	12	14	16	18	20	22	24	28	32	36													
06-450-10-0(xx)	08	09	10	11	12	14	16	18	20	22	24	28	32	36	40	44											
06-450-11-0(xx)	08	09	10	11	12	14	16	18	20	22	24	28	32	36	40	44	48	52									
06-450-12-0(xx)	08	09	10	11	12	14	16	18	20	22	24	28	32	38	40	44	48	52									
06-450-14-0(xx)	08	09	10	11	12	14	16	18	20	22	24	28	32	36	40	44	48	52									
06-450-16-0(xx)	08	09	10	11	12	14	16	18	20	22	24	28	32	36	40	44	48	52	56	60							
06-450-18-0(xx)			10	11	12	14	16	18	20	22	24	28	32	36	40	44	48	52	56	60							
06-450-20-0(xx)					12	14	16	18	20	22	24	28	32	36	40	44	48	52	56	60	64	68					
06-450-22-0(xx)					12	14	16	18	20	22	24	28	32	36	40	44	48	52	56	60	64	68					
06-450-24-0(xx)					12	14	16	18	20	22	24	28	32	36	40	44	48	52	56	60	64	68	72	76	80	88	
06-450-26-0(xx)							16	18	20	22	24	28	32	36	40	44	48	52	56	60	64	68	72	76	80	88	96
06-450-28-0(xx)							16	18	20	22	24	28	32	36	40	44	48	52	56	60	64	68	72	76	80	88	96
06-450-32-0(xx)							16	18	20	22	24	28	32	36	40	44	48	52	56	60	64	68	72	76	80	88	96

©2008, 2011, 2016 RBC Bearings Incorporated. All rights reserved.

MACHINABLE SELF-LUBRICATED STRAIGHT JOURNAL BEARING

AS81934 (formerly MIL-B-81934)

- Journal type
- High temperature — low wear
  -65°F to +325°F (-53.9°C to +162.8°C)
- Material and notes: Aluminum alloy, Cond. T8511 anodized, or chemical-film treated
  Liner: HP Uniflon® qualified to AS81934

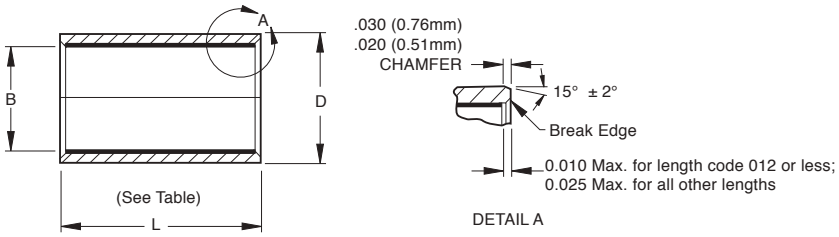

SPECIFICATIONS AND ORDERING INFORMATION

DIMENSIONS — TOLERANCES

Part Numbers Aluminum PBHP( )A Dash No.	M81934/1( )A Dash No.	Nominal Size		B +.000, - .0010 +.000, -.25		D ±0005 ±013		Weight L = 1.000 in. L = 25.4 mm Ref.	
		in.	mm	in.	mm	in.	mm	lbs.-in	kg-mm
04	-04†	1/4	6.350	.2515	6.388	.3760	9.550	.006	.003
05	-05†	5/16	7.938	.3140	7.976	.4386	11.140	.008	.004
06	-06†	3/8	9.525	.3765	9.563	.5012	12.730	.009	.004
07	-07†	7/16	11.112	.4390	11.151	.5638	14.321	.010	.005
08	-08†	1/2	12.700	.5015	12.738	.6265	15.913	.011	.005
09	-09†	9/16	14.288	.5640	14.326	.6892	17.506	.013	.006
10	-10†	5/8	15.875	.6265	15.913	.8142	20.681	.022	.010
11	-11†	11/16	17.462	.6890	17.501	.8767	22.268	.023	.010
12	-12†	3/4	19.050	.7515	19.088	.9393	23.858	.025	.011
14	-14†	7/8	22.225	.8765	22.263	1.0645	27.038	.029	.013
16	-16†	1	25.400	1.0015	25.438	1.1898	38.221	.033	.015
18	-18†	1 1/8	28.575	1.1265	28.613	1.3148	33.396	.037	.017
20	-20†	1 1/4	31.750	1.2515	31.788	1.4398	38.571	.040	.018
22	-22†	1 3/8	34.925	1.3765	34.963	1.5648	39.746	.044	.020
24	-24†	1 1/2	38.100	1.5015	38.138	1.7523	44.508	.065	.029
26	-26†	1 5/8	41.275	1.6265	41.313	1.8773	47.683	.070	.032
28	-28†	1 3/4	44.450	1.7515	44.488	2.0023	50.858	.075	.034
32	-32†	2	50.800	2.0015	50.838	2.2523	57.208	.085	.039

Add length designation in 1/32 in. increments. (See below.) †Add length designation.

LENGTH DESIGNATORS

Part Number	Length: +000, -.010 in./ +00, -.25mm																										
PBHP( )A	1/4	9/32	5/16	11/32	3/8	7/16	1/2	9/16	5/8	11/16	3/4	7/8	1	1 1/8	1 1/4	1 3/8	1 1/2	1 5/8	1 3/4	1 7/8	2	2 1/8	2 1/4	2 3/8	2 1/2	2 3/4	3
Dash No.	6.35	7.14	7.94	8.73	9.52	11.11	12.70	14.29	15.88	17.46	19.05	22.22	25.40	28.58	31.75	34.92	38.10	41.28	44.45	47.62	50.80	53.98	57.15	60.32	63.50	69.85	76.20
04	08	09	10	11	12	14																					
05	08	09	10	11	12	14	16	18																			
06	08	09	10	11	12	14	16	18	20	22																	
07	08	09	10	11	12	14	16	18	20	22	24	28															
08	08	09	10	11	12	14	16	18	20	22	24	28															
09	08	09	10	11	12	14	16	18	20	22	24	28	32	36													
10	08	09	10	11	12	14	16	18	20	22	24	28	32	36	40	44											
11	08	09	10	11	12	14	16	18	20	22	24	28	32	36	40	44	48	52									
12	08	09	10	11	12	14	16	18	20	22	24	28	32	36	40	44	48	52									
14	08	09	10	11	12	14	16	18	20	22	24	28	32	36	40	44	48	52									
16	08	09	10	11	12	14	16	18	20	22	24	28	32	36	40	44	48	52	56	60							
18			10	11	12	14	16	18	20	22	24	28	32	36	40	44	48	52	56	60							
20					12	14	16	18	20	22	24	28	32	36	40	44	48	52	56	60	64	68					
22					12	14	16	18	20	22	24	28	32	36	40	44	48	52	56	60	64	68					
24					12	14	16	18	20	22	24	28	32	36	40	44	48	52	56	60	64	68	72	76	80	88	
26							16	18	20	22	24	28	32	36	40	44	48	52	56	60	64	68	72	76	80	88	96
28							16	18	20	22	24	28	32	36	40	44	48	52	56	60	64	68	72	76	80	88	96
32							16	18	20	22	24	28	32	36	40	44	48	52	56	60	64	68	72	76	80	88	96

Bearing configuration	Part number designations for a 0.250 in. bore and 0.250 in. long aluminum journal bearing	
Base P/N (no options)	PBHP04A08	M81934/1-04A008
1st oversize O.D. (0.010 in.)	PBHP04A08Q	M81934/1-04A008T

©2008, 2011, 2016 RBC Bearings Incorporated. All rights reserved.

MACHINABLE SELF-LUBRICATED STRAIGHT JOURNAL BEARING

AS81934 (formerly MIL-B-81934)

- Journal type
- High temperature — low wear
  -65°F to +325°F (-53.9°C to +162.8°C)
- Material and notes: CRES 17-4PH,
  Heat treated, Cond. H-1150 passivated
  Liner: HP Uniflon® qualified to AS81934

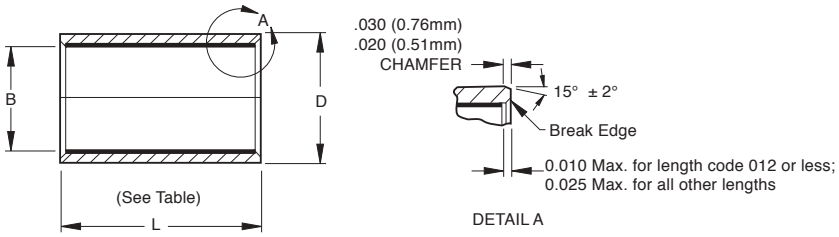

SPECIFICATIONS AND ORDERING INFORMATION

DIMENSIONS — TOLERANCES

Part Numbers CRES PBHP( )C Dash No.	M81934/1( )C Dash No.	Nominal Size		B +.000, - .0010 +.000, -.25		D +.000, - .0005 +.000, -.013		Weight L = 1.000 in. L = 25.4 mm Ref.	
		in.	mm	in.	mm	in.	mm	lbs.-in	kg-mm
04	-04†	1/4	6.350	.2515	6.388	.3760	9.550	.006	.003
05	-05†	5/16	7.938	.3140	7.976	.4386	11.140	.008	.004
06	-06†	3/8	9.525	.3765	9.563	.5012	12.730	.009	.004
07	-07†	7/16	11.112	.4390	11.151	.5638	14.321	.010	.005
08	-08†	1/2	12.700	.5015	12.738	.6265	15.913	.011	.005
09	-09†	9/16	14.288	.5640	14.326	.6892	17.506	.013	.006
10	-10†	5/8	15.875	.6265	15.913	.8142	20.681	.022	.010
11	-11†	11/16	17.462	.6890	17.501	.8767	22.268	.023	.010
12	-12†	3/4	19.050	.7515	19.088	.9393	23.858	.025	.011
14	-14†	7/8	22.225	.8765	22.263	1.0645	27.038	.029	.013
16	-16†	1	25.400	1.0015	25.438	1.1898	38.221	.033	.015
18	-18†	1 1/8	28.575	1.1265	28.613	1.3148	33.396	.037	.017
20	-20†	1 1/4	31.750	1.2515	31.788	1.4398	38.571	.040	.018
22	-22†	1 3/8	34.925	1.3765	34.963	1.5648	39.746	.044	.020
24	-24†	1 1/2	38.100	1.5015	38.138	1.7523	44.508	.065	.029
26	-26†	1 5/8	41.275	1.6265	41.313	1.8773	47.683	.070	.032
28	-28†	1 3/4	44.450	1.7515	44.488	2.0023	50.858	.075	.034
32	-32†	2	50.800	2.0015	50.838	2.2523	57.208	.085	.039

Add length designation in 1/32 in. increments. (See below.) †Add length designation.

LENGTH DESIGNATORS

Part Number	Length: +000, -.010 in./ +00, -.25mm																										
PBHP( )C	1/4	9/32	5/16	11/32	3/8	7/16	1/2	9/16	5/8	11/16	3/4	7/8	1	1 1/8	1 1/4	1 3/8	1 1/2	1 5/8	1 3/4	1 7/8	2	2 1/8	2 1/4	2 3/8	2 1/2	2 3/4	3
Dash No.	6.35	7.14	7.94	8.73	9.52	11.11	12.70	14.29	15.88	17.46	19.05	22.22	25.40	28.58	31.75	34.92	38.10	41.28	44.45	47.62	50.80	53.98	57.15	60.32	63.50	69.85	76.20
04	08	09	10	11	12	14																					
05	08	09	10	11	12	14	16	18																			
06	08	09	10	11	12	14	16	18	20	22																	
07	08	09	10	11	12	14	16	18	20	22	24	28															
08	08	09	10	11	12	14	16	18	20	22	24	28															
09	08	09	10	11	12	14	16	18	20	22	24	28	32	36													
10	08	09	10	11	12	14	16	18	20	22	24	28	32	36	40	44											
11	08	09	10	11	12	14	16	18	20	22	24	28	32	36	40	44	48	52									
12	08	09	10	11	12	14	16	18	20	22	24	28	32	36	40	44	48	52									
14	08	09	10	11	12	14	16	18	20	22	24	28	32	36	40	44	48	52									
16	08	09	10	11	12	14	16	18	20	22	24	28	32	36	40	44	48	52	56	60							
18			10	11	12	14	16	18	20	22	24	28	32	36	40	44	48	52	56	60							
20					12	14	16	18	20	22	24	28	32	36	40	44	48	52	56	60	64	68					
22					12	14	16	18	20	22	24	28	32	36	40	44	48	52	56	60	64	68					
24					12	14	16	18	20	22	24	28	32	36	40	44	48	52	56	60	64	68	72	76	80	88	
26							16	18	20	22	24	28	32	36	40	44	48	52	56	60	64	68	72	76	80	88	96
28							16	18	20	22	24	28	32	36	40	44	48	52	56	60	64	68	72	76	80	88	96
32							16	18	20	22	24	28	32	36	40	44	48	52	56	60	64	68	72	76	80	88	96

Bearing configuration	Part number designations for a 0.250 in. bore and 0.250 in. long CRES journal bearing	
Base P/N (no options)	PBHP0C08	M81934/1-04C008
Cadmium plating	PBHP04C08C	M81934/1-04C008P
Zinc Nickel plating	PBHP04C08Z	M81934/1-04C008E
1st oversize O.D. (0.010 in.)	PBHP04C08Q	M81934/1-04C008T

©2008, 2011, 2016 RBC Bearings Incorporated. All rights reserved.

MACHINABLE SELF-LUBRICATED FLANGED JOURNAL BEARING

AS81934/2 (formerly MIL-B-81934)

- Flanged journal type
- High temperature — low wear
  -65°F to +325°F (-53.9°C to +162.8°C)
- Material: Aluminum alloy, Cond. T8511 anodized or chemical-film treated
  Liner: HP Uniflon® qualified to AS81934

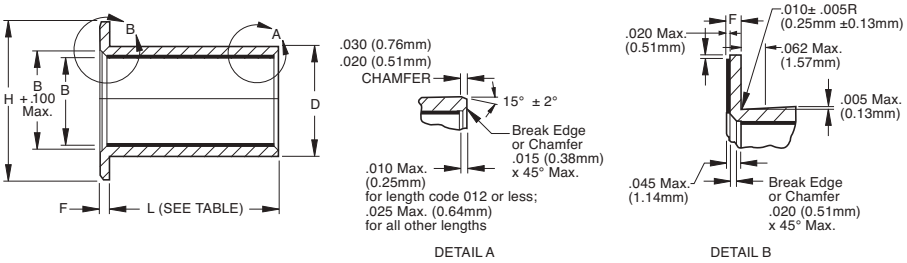

SPECIFICATIONS AND ORDERING INFORMATION

DIMENSIONS — TOLERANCES

Part Numbers Aluminum FBHP( )A Dash No.	M81934/2( )A Dash No.	Nominal Size		B +.000, - .0010 +.000, -.25		D ±0005 ±013		F +.000, - .005 +.00, -.13		H +.000, - .020 +.00, -.51		Aluminum Journal Weight L = 1.000 in. L = 25.4 mm Ref.		Flange Weight	
		in.	mm	in.	mm	in.	mm	in.	mm	in.	mm	lbs.-in	kg-mm	lbs.-in	kg-mm
04	-04†	1/4	6.350	.2515	6.388	.3760	9.550	.0625	1.588	.750	19.05	.009	.004	.003	.001
05	-05†	5/16	7.938	.3140	7.976	.4386	11.140	.0625	1.588	.812	20.62	.011	.005	.003	.001
06	-06†	3/8	9.525	.3765	9.563	.5012	12.730	.0625	1.588	.875	22.22	.012	.005	.003	.001
07	-07†	7/16	11.112	.4390	11.151	.5638	14.321	.0625	1.588	.937	23.80	.013	.006	.003	.001
08	-08†	1/2	12.700	.5015	12.738	.6265	15.913	.0625	1.588	1.000	25.40	.015	.007	.004	.002
09	-09†	9/16	14.288	.5640	14.326	.6892	17.506	.0625	1.588	1.125	28.58	.017	.008	.004	.002
10	-10†	5/8	15.875	.6265	15.913	.8142	20.681	.0625	1.588	1.250	31.75	.027	.012	.005	.002
11	-11†	11/16	17.462	.6890	17.501	.8767	22.268	.0625	1.588	1.375	34.92	.030	.014	.007	.003
12	-12†	3/4	19.050	.7515	19.088	.9393	23.858	.0625	1.588	1.500	38.10	.034	.015	.009	.004
14	-14†	7/8	22.225	.8765	22.263	1.0645	27.038	.0625	1.588	1.625	41.28	.038	.017	.009	.004
16	-16†	1	25.400	1.0015	25.438	1.1898	30.221	.0625	1.588	1.750	44.45	.043	.020	.010	.005
18	-18†	1 1/8	28.575	1.1265	28.613	1.3148	33.396	.0937	2.380	1.875	47.62	.051	.023	.014	.006
20	-20†	1 1/4	31.750	1.2515	31.788	1.4398	36.571	.0937	2.380	2.000	50.80	.058	.026	.018	.008
22	-22†	1 3/8	34.925	1.3765	34.963	1.5648	39.746	.0937	2.380	2.125	53.98	.063	.029	.019	.009
24	-24†	1 1/2	38.100	1.5015	38.138	1.7523	44.508	.0937	2.380	2.250	57.15	.084	.038	.018	.008
26	-26†	1 5/8	41.275	1.6265	41.313	1.8773	47.683	.0937	2.380	2.375	60.32	.090	.041	.020	.009
28	-28†	1 3/4	44.450	1.7515	44.488	2.0023	50.858	.0937	2.380	2.500	63.50	.098	.044	.023	.010
32	-32†	2	50.800	2.0015	50.838	2.2523	57.208	.0937	2.380	2.750	69.85	.111	.050	.026	.012

Add length designation in 1/32 in. increments. (See below.) †Add length designation.

LENGTH DESIGNATORS

Part Number	Length: +000, -.010 in./ +00, -.25mm																										
FBHP( )A	1/4	9/32	5/16	11/32	3/8	7/16	1/2	9/16	5/8	11/16	3/4	7/8	1	1 1/8	1 1/4	1 3/8	1 1/2	1 5/8	1 3/4	1 7/8	2	2 1/8	2 1/4	2 3/8	2 1/2	2 3/4	3
Dash No.	6.35	7.14	7.94	8.73	9.52	11.11	12.70	14.29	15.88	17.46	19.05	22.22	25.40	28.58	31.75	34.92	38.10	41.28	44.45	47.62	50.80	53.98	57.15	60.32	63.50	69.85	76.20
04	08	09	10	11	12	14																					
05	08	09	10	11	12	14	16	18																			
06	08	09	10	11	12	14	16	18	20	22																	
07	08	09	10	11	12	14	16	18	20	22	24	28															
08	08	09	10	11	12	14	16	18	20	22	24	28															
09	08	09	10	11	12	14	16	18	20	22	24	28	32	36													
10	08	09	10	11	12	14	16	18	20	22	24	28	32	36	40	44											
11	08	09	10	11	12	14	16	18	20	22	24	28	32	36	40	44	48	52									
12	08	09	10	11	12	14	16	18	20	22	24	28	32	38	40	44	48	52									
14	08	09	10	11	12	14	16	18	20	22	24	28	32	36	40	44	48	52									
16	08	09	10	11	12	14	16	18	20	22	24	28	32	36	40	44	48	52	56	60							
18			10	11	12	14	16	18	20	22	24	28	32	36	40	44	48	52	56	60							
20					12	14	16	18	20	22	24	28	32	36	40	44	48	52	56	60	64	68					
22					12	14	16	18	20	22	24	28	32	36	40	44	48	52	56	60	64	68					
24					12	14	16	18	20	22	24	28	32	36	40	44	48	52	56	60	64	68	72	76	80	88	
26							16	18	20	22	24	28	32	36	40	44	48	52	56	60	64	68	72	76	80	88	96
28							16	18	20	22	24	28	32	36	40	44	48	52	56	60	64	68	72	76	80	88	96
32							16	18	20	22	24	28	32	36	40	44	48	52	56	60	64	68	72	76	80	88	96

Bearing configuration	Part number designations for a 0.250 in. bore and 0.250 in. long aluminum journal bearing	
Base P/N (no options)	FBHP04A08	M81934/2-04A008
1st oversize O.D. (0.010 in.)	FBHP04A08Q	M81934/2-04A008T
2nd oversize O.D. (0.020 in.)	FBHP04A08U	M81934/2-04A008U

©2008, 2011, 2016 RBC Bearings Incorporated. All rights reserved.

MACHINABLE SELF-LUBRICATED FLANGED JOURNAL BEARING

AS81934/2 (formerly MIL-B-81934)

- Flanged journal type
- High temperature — low wear
  -65°F to +325°F. (-53.9°C to +162.8°C)
- Material: CRES 17-4PH, heat treated, Cond. H-1150 passivated
  Liner: HP Uniflon® qualified to AS81934

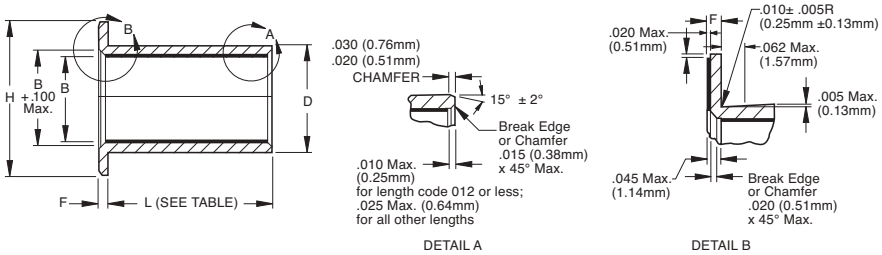

SPECIFICATIONS AND ORDERING INFORMATION

DIMENSIONS — TOLERANCES

Part Numbers CRES FBHP( )C Dash No.	M81934/2( )C Dash No.	Nominal Size		B +.000, - .0010 +.000, -.25		D +.000, - .0005 +.000, -.013		F +.000, - .005 +.00, -.13		H +.000, - .020 +.00, -.51		CRES Journal Weight L = 1.000 in. L = 25.4 mm Ref.		Flange Weight	
		in.	mm	in.	mm	in.	mm	in.	mm	in.	mm	lbs.-in	kg-mm	lbs.-in	kg-mm
04	-04†	1/4	6.350	.2515	6.388	.3760	9.550	.0625	1.588	.750	19.05	.009	.004	.003	.001
05	-05†	5/16	7.938	.3140	7.976	.4386	11.140	.0625	1.588	.812	20.62	.011	.005	.003	.001
06	-06†	3/8	9.525	.3765	9.563	.5012	12.730	.0625	1.588	.875	22.22	.012	.005	.003	.001
07	-07†	7/16	11.112	.4390	11.151	.5638	14.321	.0625	1.588	.937	23.80	.013	.006	.003	.001
08	-08†	1/2	12.700	.5015	12.738	.6265	15.913	.0625	1.588	1.000	25.40	.015	.007	.004	.002
09	-09†	9/16	14.288	.5640	14.326	.6892	17.506	.0625	1.588	1.125	28.58	.017	.008	.004	.002
10	-10†	5/8	15.875	.6265	15.913	.8142	20.681	.0625	1.588	1.250	31.75	.027	.012	.005	.002
11	-11†	11/16	17.462	.6890	17.501	.8767	22.268	.0625	1.588	1.375	34.92	.030	.014	.007	.003
12	-12†	3/4	19.050	.7515	19.088	.9393	23.858	.0625	1.588	1.500	38.10	.034	.015	.009	.004
14	-14†	7/8	22.225	.8765	22.263	1.0645	27.038	.0625	1.588	1.625	41.28	.038	.017	.009	.004
16	-16†	1	25.400	1.0015	25.438	1.1898	30.221	.0625	1.588	1.750	44.45	.043	.020	.010	.005
18	-18†	1 1/8	28.575	1.1265	28.613	1.3148	33.396	.0937	2.380	1.875	47.62	.051	.023	.014	.006
20	-20†	1 1/4	31.750	1.2515	31.788	1.4398	36.571	.0937	2.380	2.000	50.80	.058	.026	.018	.008
22	-22†	1 3/8	34.925	1.3765	34.963	1.5648	39.746	.0937	2.380	2.125	53.98	.063	.029	.019	.009
24	-24†	1 1/2	38.100	1.5015	38.138	1.7523	44.508	.0937	2.380	2.250	57.15	.084	.038	.018	.008
26	-26†	1 5/8	41.275	1.6265	41.313	1.8773	47.683	.0937	2.380	2.375	60.32	.090	.041	.020	.009
28	-28†	1 3/4	44.450	1.7515	44.488	2.0023	50.858	.0937	2.380	2.500	63.50	.098	.044	.023	.010
32	-32†	2	50.800	2.0015	50.838	2.2523	57.208	.0937	2.380	2.750	69.85	.111	.050	.026	.012

Add length designation in 1/32 in. increments. (See below.) †Add length designation.

LENGTH DESIGNATORS

Part Number FBHP( )C Dash No.	Length: +000, -.010 in./ +00, -.25mm																										
	1/4	9/32	5/16	11/32	3/8	7/16	1/2	9/16	5/8	11/16	3/4	7/8	1	1 1/8	1 1/4	1 3/8	1 1/2	1 5/8	1 3/4	1 7/8	2	2 1/8	2 1/4	2 3/8	2 1/2	2 3/4	3
	6.35	7.14	7.94	8.73	9.52	11.11	12.70	14.29	15.88	17.46	19.05	22.22	25.40	28.58	31.75	34.92	38.10	41.28	44.45	47.62	50.80	53.98	57.15	60.32	63.50	69.85	76.20
04	08	09	10	11	12	14																					
05	08	09	10	11	12	14	16	18																			
06	08	09	10	11	12	14	16	18	20	22																	
07	08	09	10	11	12	14	16	18	20	22	24	28															
08	08	09	10	11	12	14	16	18	20	22	24	28															
09	08	09	10	11	12	14	16	18	20	22	24	28	32	36													
10	08	09	10	11	12	14	16	18	20	22	24	28	32	36	40	44											
11	08	09	10	11	12	14	16	18	20	22	24	28	32	36	40	44	48	52									
12	08	09	10	11	12	14	16	18	20	22	24	28	32	38	40	44	48	52									
14	08	09	10	11	12	14	16	18	20	22	24	28	32	36	40	44	48	52									
16	08	09	10	11	12	14	16	18	20	22	24	28	32	36	40	44	48	52	56	60							
18			10	11	12	14	16	18	20	22	24	28	32	36	40	44	48	52	56	60							
20					12	14	16	18	20	22	24	28	32	36	40	44	48	52	56	60	64	68					
22					12	14	16	18	20	22	24	28	32	36	40	44	48	52	56	60	64	68					
24					12	14	16	18	20	22	24	28	32	36	40	44	48	52	56	60	64	68	72	76	80	88	
26							16	18	20	22	24	28	32	36	40	44	48	52	56	60	64	68	72	76	80	88	96
28							16	18	20	22	24	28	32	36	40	44	48	52	56	60	64	68	72	76	80	88	96
32							16	18	20	22	24	28	32	36	40	44	48	52	56	60	64	68	72	76	80	88	96

Bearing configuration	Part number designations for a 0.250 in. bore and 0.250 in. long CRES journal bearing	
Base P/N (no options)	FBHP04C08	M81934/2-04C008
Cadmium plating	FBHP04C08C	M81934/2-04C008P
Zinc Nickel plating	FBHP04C08Z	M81934/2-04C008E
1st oversize O.D. (0.010 in.)	FBHP04C08Q	M81934/2-04C008T
2nd oversize O.D. (0.020 in.)	FBHP04C08U	M81934/2-04C008U

©2008, 2011, 2016 RBC Bearings Incorporated. All rights reserved.

DYFLON® WATER RESISTANT SELF-LUBRICATED STRAIGHT JOURNAL BEARING

- Journal type
- Low friction — low wear
  -65°F to +250°F (-54°C to +121°C)
- Material:
  CRES 17-4PH, heat treated
  Liner: Dyflon® machinable

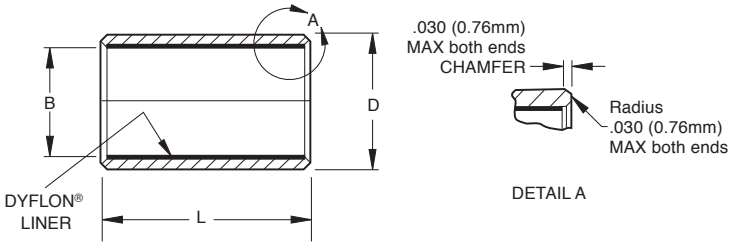

SPECIFICATIONS AND ORDERING INFORMATION

DIMENSIONS — TOLERANCES

Part Number DBS-xx-030	B +.000, - .0010 +.000, -.025		D +.000, - .0005 +.000, -.013		L +.000, - .005 +.000, -.13		Weight Approx.		Housing Bore Recommended Interference	
	in.	mm	in.	mm	in.	mm	lbs.	kg		
4	0.2525	6.414	0.3765	9.563	0.250	6.350	0.0043	0.0020	.0001 to .0011 in.	.003 to .028 mm
5	0.3150	8.001	0.4390	11.151	0.312	7.925	0.0064	0.0029	.0001 to .0011 in.	.003 to .028 mm
6	0.3775	9.589	0.5640	14.326	0.375	9.525	0.0146	0.0066	.0001 to .0011 in.	.003 to .028 mm
7	0.4400	11.176	0.6265	15.913	0.437	11.100	0.0193	0.0088	.0001 to .0011 in.	.003 to .028 mm
8	0.5025	12.764	0.6890	17.501	0.500	12.700	0.0247	0.0112	.0001 to .0011 in.	.003 to .028 mm
9	0.5650	14.351	0.7515	19.088	0.562	14.275	0.0307	0.0139	.0003 to .0015 in.	.008 to .038 mm
10	0.6275	15.939	0.8765	22.263	0.625	15.875	0.0522	0.0237	.0003 to .0015 in.	.008 to .038 mm
12	0.7535	19.139	1.0020	25.451	0.750	19.050	0.0729	0.0331	.0003 to .0015 in.	.008 to .038 mm
14	0.8785	22.314	1.1270	28.626	0.875	22.225	0.0971	0.0441	.0003 to .0015 in.	.008 to .038 mm
16	1.0035	25.489	1.2520	31.801	1.000	25.400	0.1248	0.0566	.0003 to .0015 in.	.008 to .038 mm
18	1.1285	28.664	1.3770	34.976	1.125	28.575	0.1560	0.0707	.0003 to .0017 in.	.008 to .043 mm
20	1.2535	31.839	1.5020	38.151	1.250	31.750	0.1906	0.0864	.0003 to .0017 in.	.008 to .043 mm
22	1.3800	35.052	1.6275	41.339	1.375	34.925	0.2279	0.1034	.0003 to .0017 in.	.008 to .043 mm
24	1.5050	38.227	1.7525	44.514	1.500	38.100	0.2692	0.1221	.0003 to .0017 in.	.008 to .043 mm
26	1.6300	41.402	1.8775	47.689	1.625	41.275	0.3140	0.1424	.0003 to .0017 in.	.008 to .043 mm
28	1.7750	45.085	2.0025	50.864	1.750	44.450	0.3345	0.1517	.0003 to .0017 in.	.008 to .043 mm
30	1.8800	47.752	2.1275	54.039	1.875	47.625	0.4140	0.1878	.0005 to .0020 in	.013 to .051 mm
32	2.0050	50.927	2.3775	60.389	2.000	50.800	0.7291	0.3307	.0005 to .0020 in	.013 to .051 mm
36	2.2550	57.277	2.6275	66.739	2.250	57.150	0.9138	0.4145	.0005 to .0020 in	.013 to .051 mm
40	2.5060	63.652	2.8775	73.089	2.500	63.500	1.1164	0.5064	.0005 to .0020 in	.013 to .051 mm
44	2.7560	70.002	3.1275	79.439	2.750	69.850	1.3421	0.6087	.0005 to .0020 in	.013 to .051 mm
48	3.0060	76.352	3.5025	88.964	3.000	76.200	2.1680	0.9834	.0005 to .0020 in	.013 to .051 mm
52	3.2560	82.702	*3.7525	95.314	3.250	82.550	2.5290	1.1471	.0007 to .0025 in.	.018 to .064 mm
56	3.5060	89.052	*4.0025	101.664	3.500	88.900	2.9178	1.3235	.0007 to .0025 in.	.018 to .064 mm
60	3.7560	95.402	*4.2525	108.014	3.750	95.250	3.3343	1.5124	.0007 to .0025 in.	.018 to .064 mm
64	4.0060	101.752	*4.5025	114.364	4.000	101.600	3.7786	1.7139	.0007 to .0025 in.	.018 to .064 mm
68	4.2560	108.102	*4.7525	120.714	4.250	107.950	4.2506	1.9280	.0007 to .0025 in.	.018 to .064 mm
72	*4.5070	114.478	**5.0031	127.079	4.500	114.300	4.7474	2.1534	.0007 to .0030 in.	.018 to .076 mm
76	*4.7570	120.828	**5.2531	133.429	4.750	120.650	5.2745	2.3925	.0007 to .0030 in.	.018 to .076 mm
80	*5.0070	127.178	**5.5031	139.779	5.000	127.000	5.8294	2.6441	.0007 to .0030 in.	.018 to .076 mm
88	*5.5070	139.878	**6.0031	152.479	5.500	139.700	7.0223	3.1852	.0007 to .0030 in.	.018 to .076 mm
96	*6.0070	152.578	**6.5031	165.179	6.000	152.400	8.3261	3.7766	.0007 to .0030 in.	.018 to .076 mm
104	*6.5070	165.278	**7.0031	177.879	6.500	165.100	9.7408	4.4183	.0007 to .0030 in.	.018 to .076 mm
112	*7.0070	177.978	**7.5031	108.579	7.000	177.800	11.2664	5.1103	.0007 to .0030 in.	.018 to .076 mm
120	*7.5070	190.678	**8.0031	203.279	7.500	190.500	12.9030	5.8527	.0007 to .0030 in.	.018 to .076 mm
128	*8.0070	203.378	**8.5031	251.979	8.000	203.200	14.6504	6.6453	.0007 to .0030 in.	.018 to .076 mm
	*+.000, - .0020 +.000, -.051		*+.000, - .0008 +.000, -.020 **+.000, - .0010 +.000, -.025							

Available Journal Material options: 300 series stainless steel for salt water immersion, or aluminum for light weight.

©2008, 2011, 2016 RBC Bearings Incorporated. All rights reserved.

DYFLON® WATER RESISTANT SELF-LUBRICATED FLANGED JOURNAL BEARING

- Flanged journal type
- Low friction — low wear
  -65°F to +250°F (-54°C to +121°C)
- Material:
  CRES 17-4PH, heat treated
  Liner: Dyflon® machinable

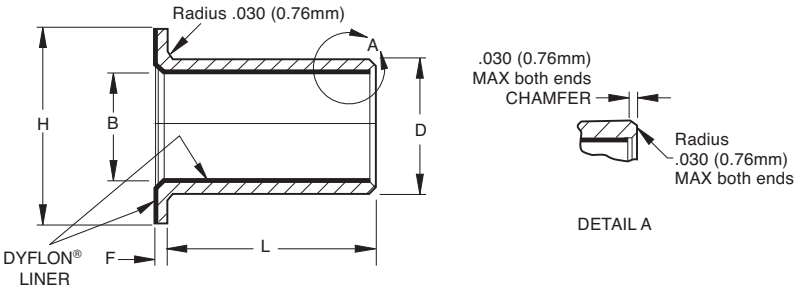

SPECIFICATIONS AND ORDERING INFORMATION

DIMENSIONS — TOLERANCES

Part Number DBSF-xx-130	B +.000, - .0010 +.000, -.025		D +.000, - .0005 +.000, -.013		L +.000, - .005 +.000, -.13		F +.005, - .005 +.13, -.13		H +.005, - .005 +.13, -.13		Weight Approx.		Housing Bore Recommended Interference	
	in.	mm	in.	mm	in.	mm	in.	mm	in.	mm	lbs.	kg		
4	0.2525	6.414	0.3765	9.563	0.375	9.525	0.125	3.175	0.500	12.700	0.0091	0.0041	.0001 to .0011 in.	.003 to .028 mm
5	0.3150	8.001	0.4390	11.151	0.437	11.100	0.125	3.175	0.562	14.275	0.0120	0.0055	.0001 to .0011 in.	.003 to .028 mm
6	0.3775	9.589	0.5640	14.326	0.500	12.700	0.125	3.175	0.625	15.875	0.0210	0.0095	.0001 to .0011 in.	.003 to .028 mm
7	0.4400	11.176	0.6265	15.913	0.562	14.275	0.125	3.175	0.750	19.050	0.0288	0.0131	.0001 to .0011 in.	.003 to .028 mm
8	0.5025	12.764	0.6890	17.501	0.625	15.875	0.125	3.175	0.875	22.225	0.0379	0.0172	.0001 to .0011 in.	.003 to .028 mm
9	0.5650	14.351	0.7515	19.088	0.687	17.450	0.125	3.175	1.062	26.975	0.0515	0.0234	.0003 to .0015 in.	.008 to .038 mm
10	0.6275	15.939	0.8765	22.263	0.750	19.050	0.125	3.175	1.188	30.175	0.0784	0.0356	.0003 to .0015 in.	.008 to .038 mm
12	0.7535	19.139	1.0020	25.451	0.875	22.225	0.125	3.175	1.312	33.325	0.1027	0.0466	.0003 to .0015 in.	.008 to .038 mm
14	0.8785	22.314	1.1270	28.626	1.000	25.400	0.125	3.175	1.500	38.100	0.1353	0.0614	.0003 to .0015 in.	.008 to .038 mm
16	1.0035	25.489	1.2520	31.801	1.187	30.150	0.125	3.175	1.750	44.450	0.1856	0.0842	.0003 to .0015 in.	.008 to .038 mm
18	1.1285	28.664	1.3770	34.976	1.312	33.325	0.187	4.750	1.890	48.006	0.2472	0.1121	.0003 to .0017 in.	.008 to .043 mm
20	1.2535	31.839	1.5020	38.151	1.437	36.500	0.187	4.750	2.015	51.181	0.2894	0.1313	.0003 to .0017 in.	.008 to .043 mm
22	1.3800	35.052	1.6275	41.339	1.562	39.675	0.187	4.750	2.140	54.356	0.3341	0.1515	.0003 to .0017 in.	.008 to .043 mm
24	1.5050	38.227	1.7525	44.514	1.687	42.850	0.187	4.750	2.265	57.531	0.3830	0.1737	.0003 to .0017 in.	.008 to .043 mm
26	1.6300	41.402	1.8775	47.689	1.812	46.025	0.187	4.750	2.390	60.706	0.4353	0.1975	.0003 to .0017 in.	.008 to .043 mm
28	1.7750	45.085	2.0025	50.864	2.000	50.800	0.187	4.750	2.515	63.881	0.4726	0.2144	.0003 to .0017 in.	.008 to .043 mm
30	1.8800	47.752	2.1275	54.039	2.215	56.261	0.187	4.750	2.640	67.056	0.5841	0.2650	.0005 to .0020 in.	.013 to .051 mm
32	2.0050	50.927	2.3775	60.389	2.375	60.325	0.187	4.750	3.000	76.200	0.9954	0.4515	.0005 to .0020 in.	.013 to .051 mm
36	2.2550	57.277	2.6275	66.739	2.625	66.675	0.187	4.750	3.250	82.550	1.2077	0.5478	.0005 to .0020 in.	.013 to .051 mm
40	2.5060	63.652	2.8775	73.089	2.875	73.025	0.187	4.750	3.500	88.900	1.4375	0.6520	.0005 to .0020 in.	.013 to .051 mm
44	2.7560	70.002	3.1275	79.439	3.125	79.375	0.187	4.750	3.750	95.250	1.6906	0.7669	.0005 to .0020 in.	.013 to .051 mm
48	3.0060	76.352	3.5025	88.964	3.375	85.725	0.187	4.750	4.000	101.600	2.5804	1.1704	.0005 to .0020 in.	.013 to .051 mm
52	3.2560	82.702	*3.7525	95.314	3.625	92.075	0.187	4.750	4.250	107.950	2.9716	1.3479	.0007 to .0025 in.	.018 to .064 mm
56	3.5060	89.052	*4.0025	101.664	3.875	98.425	0.187	4.750	4.500	114.300	3.3905	1.5379	.0007 to .0025 in.	.018 to .064 mm
60	3.7560	95.402	*4.2525	108.014	4.125	104.775	0.187	4.750	4.750	120.650	3.8372	1.7405	.0007 to .0025 in.	.018 to .064 mm
64	4.0060	101.752	*4.5025	114.364	4.375	111.125	0.187	4.750	5.000	127.000	4.3117	1.9557	.0007 to .0025 in.	.018 to .064 mm
68	4.2560	108.102	*4.7525	120.714	4.625	117.475	0.187	4.750	5.250	133.350	4.8139	2.1835	.0007 to .0025 in.	.018 to .064 mm
72	*4.5070	114.478	**5.0031	127.079	4.875	123.825	0.250	6.350	5.500	139.700	5.4141	2.4558	.0007 to .0030 in.	.018 to .076 mm
76	*4.7570	120.828	**5.2531	133.429	5.125	130.175	0.250	6.350	5.750	146.050	5.9749	2.7102	.0007 to .0030 in.	.018 to .076 mm
80	*5.0070	127.178	**5.5031	139.779	5.375	136.525	0.250	6.350	6.000	152.400	6.5635	2.9771	.0007 to .0030 in.	.018 to .076 mm
88	*5.5070	139.878	**6.0031	152.479	5.875	149.225	0.250	6.350	6.500	165.100	7.8237	3.5487	.0007 to .0030 in.	.018 to .076 mm
96	*6.0070	152.578	**6.5031	165.179	6.375	161.925	0.250	6.350	7.000	177.800	9.1948	4.1707	.0007 to .0030 in.	.018 to .076 mm
104	*6.5070	165.278	**7.0031	177.879	6.875	174.625	0.250	6.350	7.500	190.500	10.6769	4.8429	.0007 to .0030 in.	.018 to .076 mm
112	*7.0070	177.978	**7.5031	108.579	7.375	187.325	0.250	6.350	8.000	203.200	12.2698	5.5655	.0007 to .0030 in.	.018 to .076 mm
120	*7.5070	190.678	**8.0031	203.279	7.875	200.025	0.250	6.350	8.500	215.900	13.9736	6.3383	.0007 to .0030 in.	.018 to .076 mm
128	*8.0070	203.378	**8.5031	251.979	8.375	212.725	0.250	6.350	9.000	228.600	15.7884	7.1615	.0007 to .0030 in.	.018 to .076 mm
	*+.000, - .0020 +.000, -.051		*+.000, - .0008 +.000, -.020 **+.000, - .0010 +.000, -.025											

Available Journal Material options: 300 series stainless steel for salt water immersion, or aluminum for light weight.

©2008, 2011, 2016 RBC Bearings Incorporated. All rights reserved.

Standard RBC Unlined Bushings

JOURNAL BEARINGS

- **NAS Approvals**
- **Mil-Spec Approvals**
- **Numerous OEM Approvals**

©2008, 2011, 2016 RBC Bearings Incorporated. All rights reserved.

NAS76 UNLINED STRAIGHT BUSHINGS

- Material options: Aluminum bronze, beryllium copper
- Finish options: Cadmium plating
- A final size (FS) option is available. Parts are manufactured to customer's required dimensions

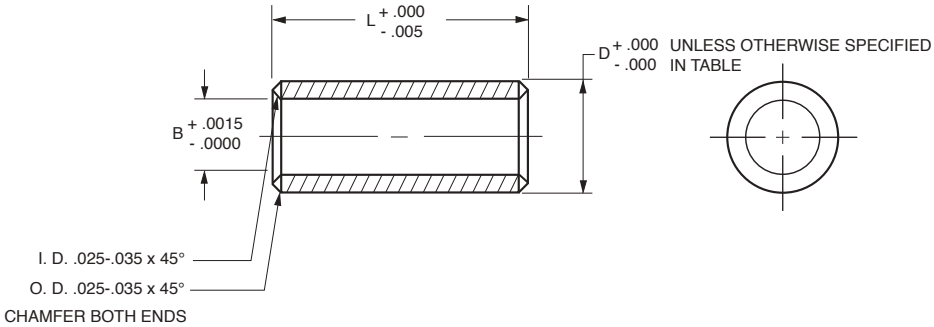

SPECIFICATIONS AND ORDERING INFORMATION

DIMENSIONS — TOLERANCES

Part Number NAS76	B +.0015, -.0000 +.038, -.000		D +.000, -.0010 +.000, -.025		Weight Approx. (Assume 1 in. Length)	
	in.	mm	in.	mm	lbs.	kg
NAS76A3-xxx	0.1900	4.826	*0.3136	7.965	0.0138	0.0062
NAS76A4-xxx	0.2500	6.350	*0.3761	9.553	0.0175	0.0079
NAS76A5-xxx	0.3125	7.938	*0.4386	11.140	0.0209	0.0095
NAS76A6-xxx	0.3750	9.525	**0.5013	12.733	0.0244	0.0111
NAS76A7-xxx	0.4375	11.113	**0.5638	14.321	0.0279	0.0127
NAS76A8-xxx	0.5000	12.700	***0.6265	15.913	0.0315	0.0143
NAS76A9-xxx	0.5625	14.288	0.6892	17.506	0.0350	0.0159
NAS76A10-xxx	0.6250	15.875	0.8142	20.681	0.0605	0.0274
NAS76A11-xxx	0.6875	17.463	0.8767	22.268	0.0657	0.0298
NAS76A12-xxx	0.7500	19.050	0.9393	23.858	0.0710	0.0322
NAS76A14-xxx	0.8750	22.225	1.0648	27.046	0.0818	0.0371
NAS76A16-xxx	1.0000	25.400	1.1898	30.221	0.0923	0.0419
NAS76A18-xxx	1.1250	28.575	1.3148	33.396	0.1028	0.0466
NAS76A20-xxx	1.2500	31.750	1.4399	36.573	0.1134	0.0514
			*+.000, -.0005 +.000, -.013 **+.000, -.0007 +.000, -.018 ***+.000, -.0008 +.000, -.020			

Available journal material options:
A=Aluminum bronze alloy 642 per AMS 4640 (shown above)
B=Beryllium copper per QQ-C-530

xxx: Length Code= First Digit in whole inches.
Last two digits in 32nds of an inch.
(ex: -025 = .7813 in.)

JOURNAL BEARINGS

©2008, 2011, 2016 RBC Bearings Incorporated. All rights reserved.

NAS77 UNLINED FLANGED BUSHINGS

- Material options: Aluminum bronze, beryllium copper, alloy steel, CRES
- Finish options: Cadmium plating, aluminum coating
- A final size (FS) option is available. Parts are manufactured to customer's required dimensions

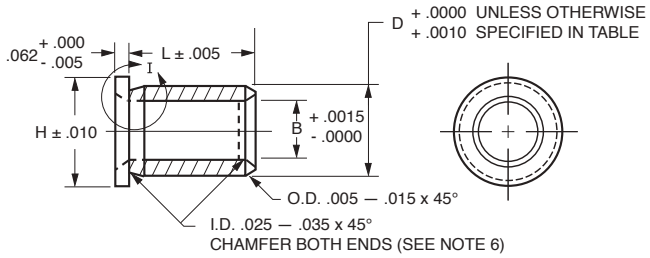

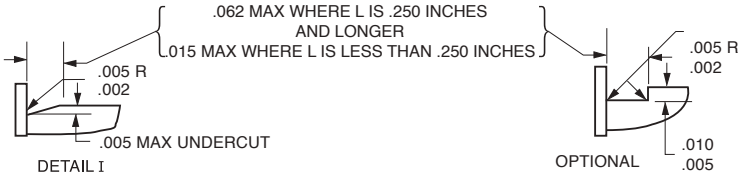

SPECIFICATIONS AND ORDERING INFORMATION

DIMENSIONS — TOLERANCES

Part Number	B		D		F		H		Weight	
	+.0015, -.0000 +.038, -.000		+.000, -.0010 +.000, -.025		+.000, -.005 +.00, -.13		+.010, -.010 +.25, -.25		Approx. (Assume 1 in. Length)	
	in.	mm	in.	mm	in.	mm	in.	mm	lbs.	kg
NAS77A3-xxx	0.1900	4.826	*0.3136	7.965	0.062	1.575	0.437	11.100	0.0147	0.0067
NAS77A4-xxx	0.2500	6.350	*0.3761	9.553	0.062	1.575	0.500	12.700	0.0186	0.0084
NAS77A5-xxx	0.3125	7.938	*0.4386	11.140	0.062	1.575	0.562	14.275	0.0222	0.0101
NAS77A6-xxx	0.3750	9.525	**0.5013	12.733	0.062	1.575	0.625	15.875	0.0259	0.0117
NAS77A7-xxx	0.4375	11.113	**0.5638	14.321	0.062	1.575	0.687	17.450	0.0295	0.0134
NAS77A8-xxx	0.5000	12.700	***0.6265	15.913	0.062	1.575	0.750	19.050	0.0332	0.0151
NAS77A9-xxx	0.5625	14.288	0.6892	17.506	0.062	1.575	0.812	20.625	0.0369	0.0167
NAS77A10-xxx	0.6250	15.875	0.8142	20.681	0.062	1.575	1.000	25.400	0.0639	0.0290
NAS77A11-xxx	0.6875	17.463	0.8767	22.268	0.062	1.575	1.062	26.975	0.0693	0.0315
NAS77A12-xxx	0.7500	19.050	0.9393	23.858	0.062	1.575	1.125	28.575	0.0749	0.0340
NAS77A14-xxx	0.8750	22.225	1.0648	27.046	0.062	1.575	1.250	31.750	0.0860	0.0390
NAS77A16-xxx	1.0000	25.400	1.1898	30.221	0.062	1.575	1.375	34.925	0.0970	0.0440
NAS77A18-xxx	1.1250	28.575	1.3148	33.396	0.062	1.575	1.500	38.100	0.1080	0.0490
NAS77A20-xxx	1.2500	31.750	1.4399	36.573	0.062	1.575	1.625	41.275	0.1190	0.0540
NAS77A22-xxx	1.3750	34.925	1.5649	39.748	0.062	1.575	1.750	44.450	0.1300	0.0590
NAS77A24-xxx	1.5000	38.100	1.6899	42.923	0.062	1.575	1.875	47.625	0.1410	0.0639
	*+.000, -.0020 +.000, -.051		*+.000, -.0005 +.000, -.013 **+.000, -.0007 +.000, -.018 ***+.000, -.0008 +.000, -.020							

Available journal material options:
A=Aluminum bronze alloy 642 per AMS 4640 (shown above)
S=Steel alloy 4130 per AMS-S-6758
C=CRES type 17-4PH per AMS 5643
B=Beryllium copper per ASTM-B-196

xxx: Length in .010 increments (ex: -025 = .25 in.)

©2008, 2011, 2016 RBC Bearings Incorporated. All rights reserved.

For more information visit our web site at **rbcbearings.com**

MS14237 UNLINED STRAIGHT BUSHINGS

- Material options: CRES, alloy steel, aluminum bronze, beryllium copper
- Finish options: Cadmium plating, zinc nickel plating, IVD aluminum coating
- A final size (FS) option is available. Parts are manufactured to customer's required dimensions

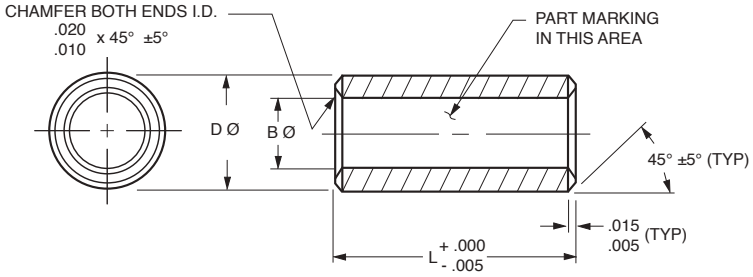

SPECIFICATIONS AND ORDERING INFORMATION

DIMENSIONS — TOLERANCES

Part Number	B +.007, -.000 +.180, -.000		D +.000, -.0005 +.000, -.013		Weight Approx. (Assume 1 in. Length)		Interference Fit (Ref.)	
	in.	mm	in.	mm	lbs.	kg		
MS14237C03-xxx	0.1770	4.496	0.3142	7.981	0.0149	0.0068	.0004/.0017 in.	.003/.028 mm
MS14237C04-xxx	*0.2350	5.969	0.3767	9.568	0.0192	0.0087	.0004/.0017 in.	.003/.028 mm
MS14237C05-xxx	*0.2990	7.595	0.4393	11.158	0.0229	0.0104	.0005/.0018 in.	.013/.046 mm
MS14237C06-xxx	*0.3560	9.042	*0.5020	12.751	0.0277	0.0126	.0005/.0020 in.	.013/.051 mm
MS14237C07-xxx	0.4210	10.693	*0.5646	14.341	0.0313	0.0142	.0005/.0021 in.	.013/.053 mm
MS14237C08-xxx	0.4830	12.268	**0.6272	15.931	0.0354	0.0161	.0005/.0022 in.	.013/.056 mm
MS14237C10-xxx	0.6080	15.443	***0.8150	20.701	0.0655	0.0297	.0006/.0025 in.	.015/.064 mm
MS14237C12-xxx	**0.7320	18.593	***0.9400	23.876	0.0773	0.0351	.0006/.0025 in.	.015/.064 mm
MS14237C14-xxx	**0.8570	21.768	***1.0651	27.054	0.0889	0.0403	.0006/.0026 in.	.015/.066 mm
MS14237C16-xxx	**0.9820	24.943	***1.1901	30.229	0.1005	0.0456	.0006/.0026 in.	.015/.066 mm
MS14237C18-xxx	**1.1070	28.118	***1.3151	33.404	0.1120	0.0508	.0006/.0026 in.	.015/.066 mm
MS14237C20-xxx	**1.2320	31.293	***1.4401	36.579	0.1236	0.0561	.0006/.0026 in.	.015/.066 mm
	*+.008, -.000 +.200, -.000		*+.000, -.0007 +.000, -.020 **+.000, -.0008 +.000, -.025 ***+.000, -.0010 +.000, -.025					

Available journal material options:
C=CRES 17-4PH per AMS 5643 (shown above)
S=Steel alloy 4130 per Mil-S-6758
A=Aluminum nickel bronze per AMS 4640
B=Beryllium copper per QQ-C-530

xxx: Length in .010 increments (ex: -025 = .25 in.)

JOURNAL BEARINGS

©2008, 2011, 2016 RBC Bearings Incorporated. All rights reserved.

MS14238 UNLINED FLANGED BUSHINGS

- Material options: CRES, Alloy steel, aluminum bronze, beryllium copper
- Finish options: Cadmium plating, zinc nickel plating, IVD aluminum coating
- A final size (FS) option is available. Parts are manufactured to customer's required dimensions

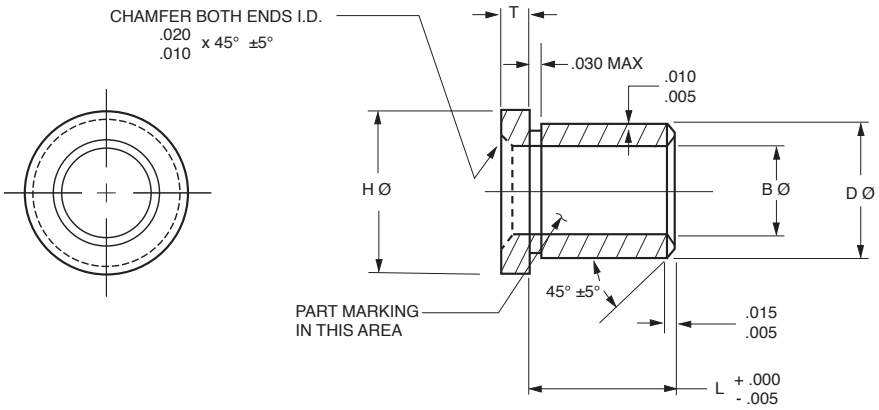

SPECIFICATIONS AND ORDERING INFORMATION

DIMENSIONS — TOLERANCES

Part Number	B +.007, -.000 +.180, -.000		D +.000, -.0005 +.000, -.013		F +.000, -.005 +.00, -.13		H +.010, -.010 +.25, -.25		Weight Approx. (Assume 1 in. Length)		Interference Fit (Ref.)	
	in.	mm	in.	mm	in.	mm	in.	mm	lbs.	kg		
MS14238C03-xxx	0.1770	4.496	0.3142	7.981	0.062	1.575	0.447	11.354	0.0157	0.0071	.0004/.0017 in.	.003/.028 mm
MS14238C04-xxx	*0.2350	5.969	0.3767	9.568	0.062	1.575	0.510	12.954	0.0204	0.0093	.0004/.0017 in.	.003/.028 mm
MS14238C05-xxx	*0.2990	7.595	0.4393	11.158	0.062	1.575	0.572	14.529	0.0243	0.0110	.0005/.0018 in.	.013/.046 mm
MS14238C06-xxx	*0.3560	9.042	*0.5020	12.751	0.062	1.575	0.635	16.129	0.0293	0.0133	.0005/.0020 in.	.013/.051 mm
MS14238C07-xxx	0.4210	10.693	*0.5646	14.341	0.062	1.575	0.697	17.704	0.0330	0.0150	.0005/.0021 in.	.013/.053 mm
MS14238C08-xxx	0.4830	12.268	**0.6272	15.931	0.062	1.575	0.760	19.304	0.0373	0.0169	.0005/.0022 in.	.013/.056 mm
MS14238C10-xxx	0.6080	15.443	***0.8150	20.701	0.094	2.388	1.010	25.654	0.0716	0.0325	.0006/.0025 in.	.015/.064 mm
MS14238C10A-xxx	0.6080	15.443	***0.8150	20.701	0.062	1.575	1.010	25.654	0.0691	0.0313	.0006/.0025 in.	.015/.064 mm
MS14238C12-xxx	**0.7320	18.593	***0.9400	23.876	0.094	2.388	1.135	28.829	0.0843	0.0382	.0006/.0025 in.	.015/.064 mm
MS14238C14-xxx	**0.8570	21.768	***1.0651	27.054	0.094	2.388	1.260	32.004	0.0967	0.0438	.0006/.0026 in.	.015/.066 mm
MS14238C16-xxx	**0.9820	24.943	***1.1901	30.229	0.094	2.388	1.385	35.179	0.1090	0.0495	.0006/.0026 in.	.015/.066 mm
MS14238C18-xxx	**1.1070	28.118	***1.3151	33.404	0.125	3.175	1.510	38.354	0.1252	0.0568	.0006/.0026 in.	.015/.066 mm
MS14238C20-xxx	**1.2320	31.293	***1.4401	36.579	0.125	3.175	1.635	41.529	0.1380	0.0626	.0006/.0026 in.	.015/.066 mm
	*+.008, -.000 +.200, -.000 **+.010, -.000 +.250, -.000		*+.000, -.0007 +.000, -.018 **+.000, -.0008 +.000, -.020 ***+.000, -.0010 +.000, -.025									

Available journal material options:
C=CRES 17-4PH per AMS 5643 (shown above)
S=Steel alloy 4130 per Mil-S-6758
A=Aluminum nickel bronze per AMS 4640
B=Beryllium copper per ASTM B 196

xxx: Length in .010 increments (ex: -025 = .25 in.)

©2008, 2011, 2016 RBC Bearings Incorporated. All rights reserved.

Special RBC Unlined Bushings

- **Exotic Materials**
- **Customized Product Configuration**
- **State-of-the-Art Precision Machinery and Measurement Instruments**
- **Quality System Approvals: D1-9000**
  ISO 9002
  Customer Approvals

©2008, 2011, 2016 RBC Bearings Incorporated. All rights reserved.

RBC Links and Assemblies

GENERAL FEATURES AND TECHNICAL SPECIFICATIONS

Adjustable

A link allows for the use of metal-to-metal greased, solid film lubricant, Teflon® lined, loader slot, and split ball constructions.

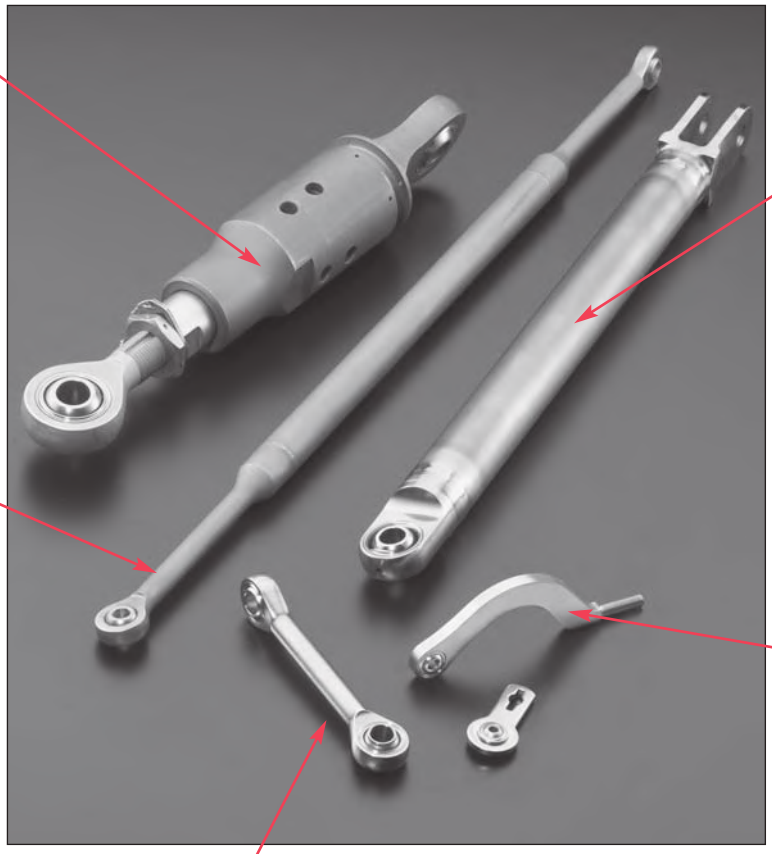

Materials

17-4PH, 15-5PH, PH13-8Mo, Titanium, Inconel® 718, with many coating options available.

Weldment Options

Allow for weight savings. Some weldments are capable of up to 1000°F (540°C) applications.

Design Features

Links may be straight, curved (in more than one plane). Complex forms are possible.

Applications may be for static mounts or dynamic push-pull control rod linkages.

Configurations

Integral bearing/link configurations are possible to save space and weight. Link configurations available from round bar, tube, hex stock turnbuckles, flat bar, stampings, forgings, and castings.

Teflon® is a registered trademark of DuPont.
Inconel® is a registered trademark of Alloys International, Inc. and The International Nickel Company, Inc.

©2008, 2011, 2016 RBC Bearings Incorporated. All rights reserved.

For more information visit our web site at **rbcbearings.com**

Helicopter Applications

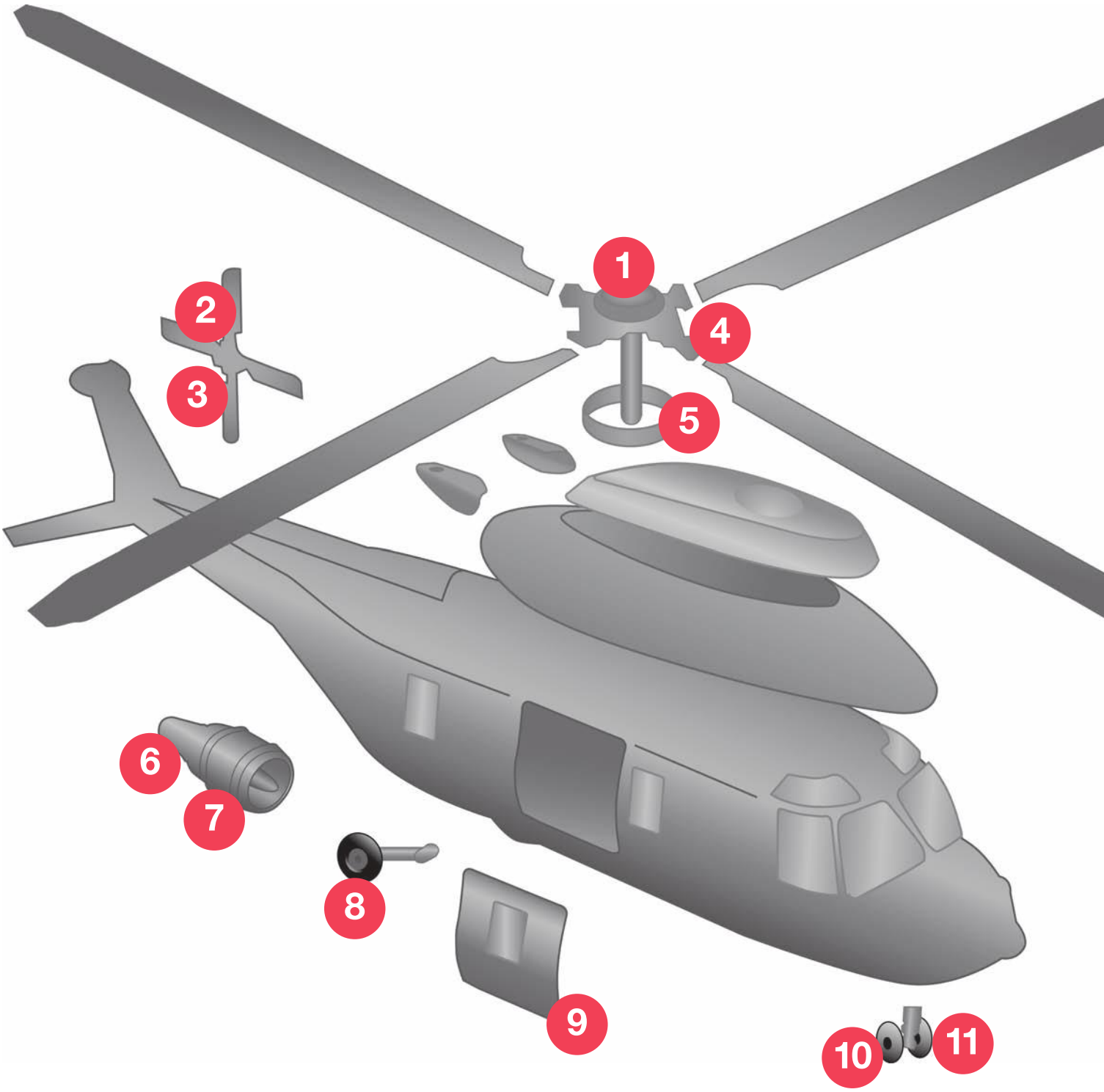

©2008, 2011, 2016 RBC Bearings Incorporated. All rights reserved.

1. Main Rotor Bearings

2. Tail Rotor Pitch Link Bearings

3. Tail Rotor Bearings

4. Main Rotor Pitch Link Bearings

5. Main Rotor Swashplate Slider Bearings

6. Engine Gear Box and Transmission Bearings

7 & 8. Rod Ends, Sphericals, and Journal Bearings for Landing Gear and Engines

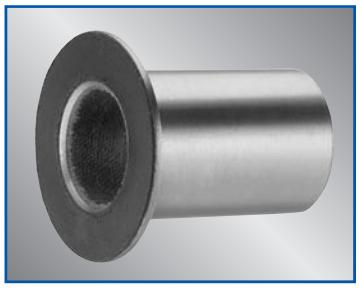

9 & 10. Self-lubricating Bushings for Doors and Landing Gear

11. Landing Gear Bearings

Airframe Applications

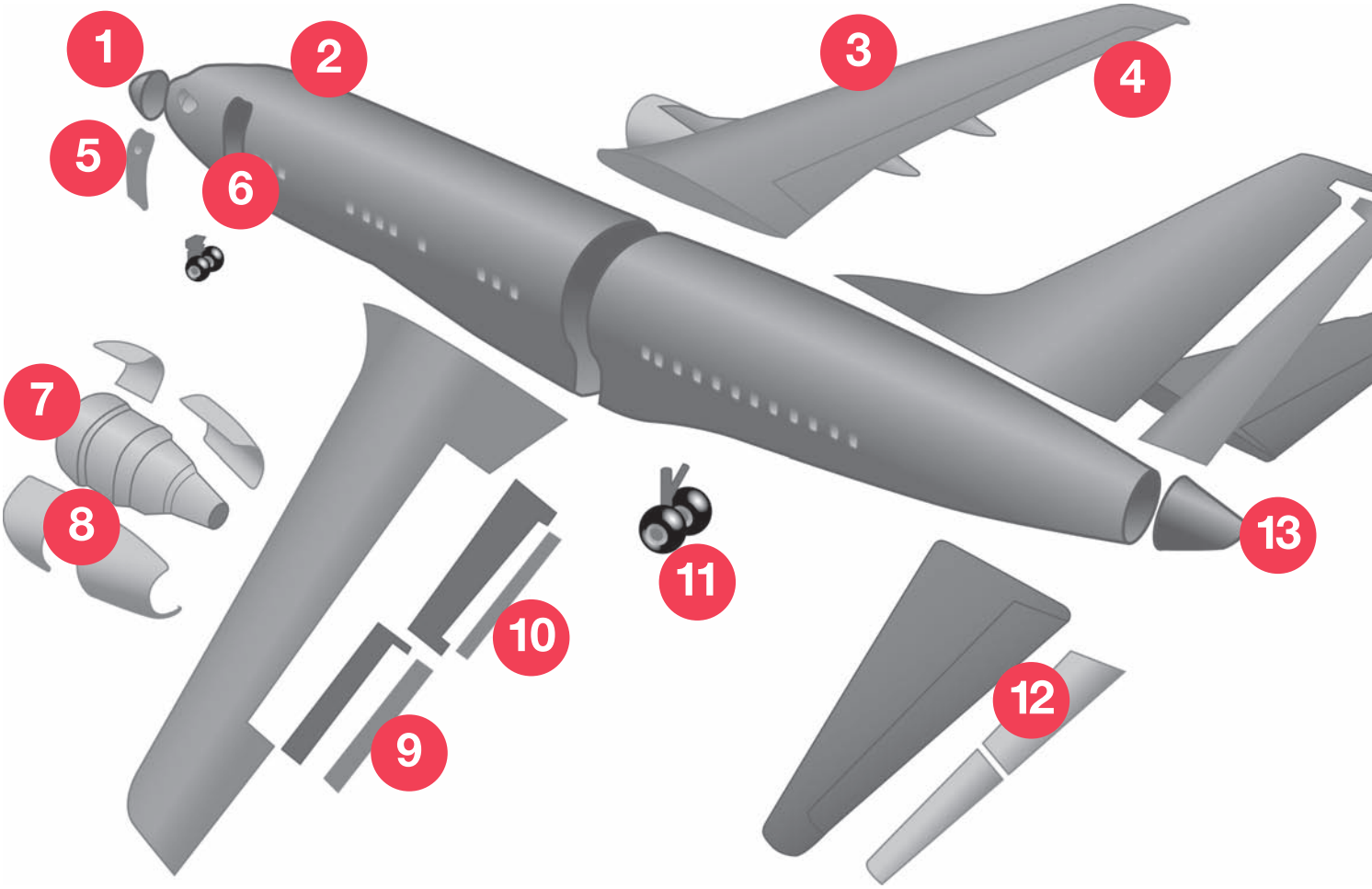

1. Radar Gimbal Thin Section Bearings

2. Stowage Bin Support Bearings

3. Airframe Control Bearings

©2008, 2011, 2016 RBC Bearings Incorporated. All rights reserved.

4. Spherical Plain and Ball Bearing Rod Ends used in Actuator and Aircraft Control Linkages

5. Door Locking Mechanism and Landing Gear Bushings, Actuator Bearings

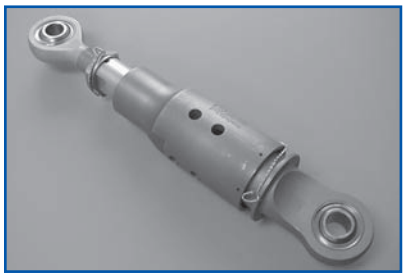

6. Door Linkage Bearings

7. Engine Bearings

8. Thrust Reverser Linkage Bearings

9. Ball and Roller Rod Ends used on Control Surfaces

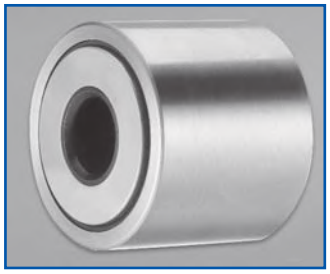

10. Track Rollers

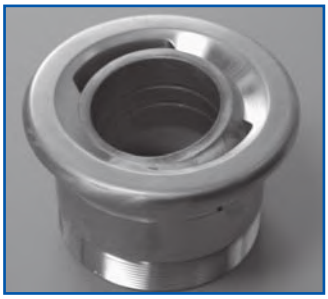

11. Landing Gear Trunnion Bearings

12. Horizontal Stabilizer Bearings

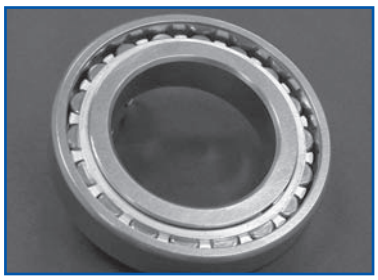

13. APU Bearings

CONVERSION TABLES

TO CONVERT FROM	TO		MULTIPLY BY
Acceleration			
foot/second^2	meter/second^2	m/s^2	0.3048
inch/second^2	meter/second^2	m/s^2	0.0254
Area			
foot^2	meter^2	m^2	0.09290304
inch^2	meter^2	m^2	0.00064516
inch^2	millimeter^2	mm^2	645.16
yard^2	meter^2	m^2	0.836127
mile^2 (U.S. statute)	meter^2	m^2	2589988
Bending Moment or Torque			
dyne-centimeter	newton-meter	N • m	0.0000001
kilogram-force-meter	newton-meter	N • m	9.806650
pound-force-inch	newton-meter	N • m	0.1129848
pound-force-foot	newton-meter	N • m	1.355818
Energy			
B.T.U. (International Table)	joule	J	1055.056
foot-pound-force	joule	J	1.355818
kilowatt-hour	megajoule	MJ	3.6
Force			
kilogram-force	newton	N	9.806650
kilopond-force	newton	N	9.806650
pound-force (lbf avoirdupois)	newton	N	4.448222
Length			
fathom	meter	m	1.8288
foot	meter	m	0.3048
inch	millimeter	mm	25.4
microinch	micrometer	um	0.0254
micron (_n)	millimeter	mm	0.0010
mile (U.S. statute)	meter	m	1609.344
yard	meter	m	0.9144
nautical mile (UK)	meter	m	1853.18
Mass			
Kilogram-force-second^2/meter (mass)	kilogram	kg	9.806650
kilogram-mass	kilogram	kg	1.0
pound-mass	kilogram	kg	0.4535924
ton (long, 2240 lbm)	kilogram	kg	1016.047
ton (short, 2000 lbm)	kilogram	kg	907.1847
tonne	kilogram	kg	1000.000
Power			
B.T.U. (International Table)/hour	watt	W	0.293071
B.T.U. (International Table)/minute	watt	W	17.58426
horsepower (550 ft lbf/s)	kilowatt	kW	0.745700
B.T.U. (thermochemical)/minute	watt	W	17.57250
Pressure or Stress (Force/Area)			
newton/meter^2	pascal	Pa	1.0000
kilogram-force/centimeter^2	pascal	Pa	98066.50
kilogram-force/meter^2	pascal	Pa	9.806650
kilogram-force/millimeter^2	pascal	Pa	9806650
pound-force/foot^2	pascal	Pa	47.88026
pound-force/inch^2 (psi)	megapascal	MPa	0.006894757
Temperature			
degree Celsius	degree Kelvin	°K	$t_k = t_c + 273.15$
degree Fahrenheit	degree Kelvin	°K	$k = {}^5/_9\ (t_f + 459.67)$
degree Fahrenheit	degree Celsius	°C	$t_c = {}^5/_9\ (t_f - 32)$
Velocity			
foot/minute	meter/second	m/s	0.00508
foot/second	meter/second	m/s	0.3048
inch/second	meter/second	m/s	0.0254
kilometer/hour	meter/second	m/s	0.27778
mile/hour (U.S. statute)	meter/second	m/s	0.44704
mile/hour (U.S. statute)	kilometer/hour	km/h	1.609344
Volume			
foot^3	meter^3	m^3	0.02831685
gallon (U.S. liquid)	liter	l	3.785412
liter	meter^3	m^3	0.001
inch^3	meter^3	m^3	0.00001638706
inch^3	centimeter^3	cm^3	16.38706
inch^3	millimeter^3	mm^3	16387.06
ounce (U.S. fluid)	centimeter^3	cm^3	29.57353
yard^3	meter^3	m^3	0.7645549

VISCOSITY CONVERSION TABLE

SUS Saybolt (sec.)	R' Redwood (sec.)	E Engler (deg.)	cSt Centistokes
35	32.2	1.18	27
40	36.2	1.32	4.3
45	40.6	1.46	59
50	44.9	1.60	7.4
55	49.1	1.75	8.9
60	53.5	1.88	10.4
65	57.9	2.02	11.8
70	62.3	2.15	13.1
75	67.6	2.31	14.5
80	71.0	2.42	15.8
85	75.1	2.55	17.0
90	79.6	2.68	18.2
95	84.2	2.81	19.4
100	88.4	2.95	20.6
110	97.1	3.21	23.0
120	105.9	3.49	25.0
130	114.8	3.77	27.5
140	123.6	4.04	29.8
150	132.4	4.32	32.1
160	141.1	4.59	34.3
170	150.0	4.88	36.5
180	158.8	5.15	38.8
190	167.5	5.44	41.0
200	176.4	5.72	43.2
220	194.0	6.28	47.5
240	212	6.85	51.9
260	229	7.38	56.5
280	247	7.95	60.5
300	265	8.51	64.9
325	287	9.24	70.3
350	309	9.95	75.8
375	331	10.7	81.2
400	353	11.4	86.8
425	375	12.1	92.0
450	397	12.8	97.4
475	419	13.5	103
500	441	14.2	108
550	485	15.6	119
600	529	17.0	130
650	573	18.5	141
700	617	19.9	152
750	661	21.3	163
800	705	22.7	173
850	749	24.2	184
900	793	25.6	195
950	837	27.0	206
1000	882	28.4	217
1200	1058	34.1	260
1400	1234	39.8	302
1600	1411	45.5	347
1800	1587	51	390
2000	1763	57	433
2500	2204	71	542
3000	2646	85	650
3500	3087	99	758
4000	3526	114	867
4500	3967	128	974
5000	4408	142	1082
5500	4849	156	1150
6000	5290	170	1300
6500	5730	185	1400
7000	6171	199	1510
7500	6612	213	1630
8000	7053	227	1740
8500	7494	242	1850
9000	7934	256	1960
9500	8375	270	2070
10000	8816	284	2200

For more information visit our web site at **rbcbearings.com**

INCHES TO MILLIMETERS - UNITS

Inches		0	1	2	3	4	5	6	7	8
0	0.0000	0.000	25.400	50.800	76.200	101.600	127.000	152.400	177.800	203.200
1/16	0.0625	1.588	26.988	52.388	77.788	103.188	128.588	153.988	179.388	204.788
1/8	0.1250	3.175	28.575	53.975	79.375	104.775	130.175	155.575	180.975	206.375
3/16	0.1875	4.763	30.162	55.562	80.962	106.362	131.762	157.162	182.562	207.962
1/4	0.2500	6.350	31.750	57.150	82.550	107.950	133.350	158.750	184.150	209.550
5/16	0.3125	7.938	33.338	58.738	84.138	109.538	134.938	160.338	185.735	211.138
3/8	0.3750	9.525	34.925	60.325	85.725	111.125	136.525	161.925	187.325	212.725
7/16	0.4375	11.112	36.512	61.912	87.312	112.712	138.112	163.512	188.912	214.312
1/2	0.5000	12.700	38.100	63.500	88.900	114.300	139.700	165.100	190.500	215.900
9/16	0.5625	14.288	39.688	65.088	90.488	115.888	141.288	166.688	192.088	217.488
5/8	0.6250	15.875	41.275	66.675	92.075	117.475	142.875	168.275	193.675	219.075
11/16	0.6875	17.462	42.862	68.262	93.662	119.062	144.462	169.862	195.262	220.662
3/4	0.7500	19.050	44.450	69.850	95.250	120.650	146.050	171.450	196.850	222.250
13/16	0.8125	20.638	46.038	71.438	96.838	122.238	147.638	173.038	198.438	223.838
7/8	0.8750	22.225	47.625	73.025	98.425	123.825	149.225	174.625	200.025	225.425
15/16	0.9375	23.812	49.212	74.612	100.012	125.412	150.812	176.212	201.612	227.012

Inches		9	10	11	12	13	14	15
0	0.0000	228.600	254.000	279.400	304.800	330.200	355.600	381.000
1/16	0.0625	230.188	255.588	280.988	306.388	331.788	357.188	382.588
1/8	0.1250	231.775	257.175	282.575	307.975	333.375	358.775	384.175
3/16	0.1875	233.362	258.762	284.162	309.562	334.962	360.362	385.762
1/4	0.2500	234.950	260.350	285.750	311.150	336.550	361.950	387.350
5/16	0.3125	236.538	261.938	287.338	312.738	338.138	363.538	388.938
3/8	0.3750	238.125	263.525	288.925	314.325	339.725	365.125	390.525
7/16	0.4375	239.712	265.112	290.512	315.912	341.312	366.712	392.112
1/2	0.5000	241.300	266.700	292.100	317.500	342.900	368.300	393.700
9/16	0.5625	242.888	268.288	293.688	319.088	344.488	369.888	395..288
5/8	0.6250	244.475	269.875	295.275	320.675	346.075	371.475	396.875
11/16	0.6875	246.062	271.462	296.862	322.262	347662	373.062	398.462
3/4	0.7500	247.650	273.050	298.450	323.850	349.250	374.650	400.050
13/16	0.8125	249.238	274.638	300.038	325.438	350.838	376.238	401.638
7/8	0.8750	250.825	276.225	301.625	327.025	352.425	377.825	403.225
15/16	0.9375	252.412	277.812	303.212	328.612	354.012	379.412	404.812

B.S.I. Norm No. 350
A.S.A. Norm No. B48.1 } 1 inch = 25.400 mm (exact)

DIN 4890, 1mm = $\frac{1}{25.4}$ inches

UNITS

Inches		10
0	—	254
1	25.4	279.4
2	50.8	304.8
3	76.2	330.2
4	101.6	355.6
5	127	381
6	152.4	406.4
7	177.8	431.8
8	203.2	457.2
9	228.6	482.6

FRACTIONS

1/10"		1/100"		1/1000"		1/10000"	
Inches	mm	Inches	mm	Inches	mm	Inches	mm
0.1	2.54	0.01	0.254	0.001	0.0254	0.0001	0.00254
0.2	5.08	0.02	0.508	0.002	0.0508	0.0002	0.00508
0.3	7.62	0.03	0.762	0.003	0.0762	0.0003	0.00762
0.4	10.16	0.04	1.016	0.004	0.1016	0.0004	0.01016
0.5	12.70	0.05	1.270	0.005	0.1270	0.0005	0.01270
0.6	15.24	0.06	1.524	0.006	0.1524	0.0006	0.01524
0.7	17.78	0.07	1.778	0.007	0.1778	0.0007	0.01778
0.8	20.32	0.08	2.032	0.008	0.2032	0.0008	0.02032
0.9	22.86	0.09	2.286	0.009	0.2286	0.0009	0.02286

MILLIMETERS TO INCHES - UNITS

mm		10	20	30	40	50	60	70	80	90
0	—	0.39370	0.78740	1.18110	1.57480	1.96850	2.36220	2.75591	3.14961	3.54331
1	0.03937	0.43307	0.82677	1.22047	1.61417	2.00787	2.40157	2.79528	3.18898	3.58268
2	0.07874	0.47244	0.86614	1.25984	1.65354	2.04724	2.44094	2.83465	3.22835	3.62205
3	0.11811	0.51181	0.90551	1.29921	1.69291	2.08661	2.48031	2.87402	3.26772	3.66142
4	0.15748	0.55118	0.94488	1.33858	1.73228	2.12598	2.51969	2.91339	3.30709	3.70079
5	0.19685	0.59055	0.98425	1.37795	1.77165	2.16535	2.55906	2.95276	3.34646	3.74016
6	0.23622	0.62992	1.02362	1.41732	1.71102	2.20472	2.59843	2.99213	3.38583	3.77953
7	0.27559	0.66929	1.06299	1.45669	1.85039	2.24409	2.63780	3.03150	3.42520	3.81890
8	0.31496	0.70866	1.10236	1.49606	1.88976	2.28346	2.67717	3.07087	3.46457	3.85827
9	0.35433	0.74803	1.14173	1.53543	1.92913	2.32283	2.71654	3.11024	3.50394	3.89764

mm		100	200	300
0	—	3.93701	7.87402	11.81100
10	0.39370	4.33071	8.26772	12.20470
20	0.78740	4.72441	8.66142	12.59840
30	1.18110	5.11811	9.05512	12.99210
40	1.57480	5.51181	9.44882	13.38580
50	1.96850	5.90551	9.84252	13.77950
60	2.36220	6.29921	10.23620	14.17320
70	2.75591	6.69291	10.62990	14.56690
80	3.14961	7.08661	11.02360	14.96060
90	3.54331	7.48031	11.41730	15.35430

FRACTIONS

1/10 mm		1/100 mm		1/1000 mm	
mm	inches	mm	inches	mm	inches
0.1	0.00394	0.01	0.00039	0.001	0.000039
0.2	0.00787	0.02	0.00079	0.002	0.000079
0.3	0.01181	0.03	0.00118	0.003	0.000118
0.4	0.01575	0.04	0.00157	0.004	0.000157
0.5	0.01969	0.05	0.00197	0.005	0.000197
0.6	0.02362	0.06	0.00236	0.006	0.000236
0.7	0.02756	0.07	0.00276	0.007	0.000276
0.8	0.03150	0.08	0.00315	0.008	0.000315
0.9	0.03543	0.09	0.00354	0.009	0.000354

RBC Aerospace Bearing Products

RBC Bearings Incorporated has been producing bearings in the USA since 1919.
RBC offers a full line of aerospace bearings, including unique custom configurations.

Spherical Bearings

- MS approved to AS81820 (formerly MIL-B-81820)
- Boeing and Airbus approved
- Self-lubricating • Metal-to-Metal
- Loader slots • High temperature
- Low coefficient of friction
- Special configurations and materials

Rod End Bearings

- MS approved to AS81935 (formerly MIL-B-81935)
- Boeing and Airbus approved
- Self-lubricating • Metal-to-Metal
- Loader slots • High temperature
- Low coefficient of friction
- Special configurations and materials

Thin Section Ball Bearings

- Standard cross-sections to one inch
- Stainless steel and other materials are available • Sizes to 40 inches
- Seals available on all sizes and standard cross-sections
- Super duplex configurations

Cargo Roller Bearings

- Boeing approved
- Features precision ground, semi-ground, and unground ball bearings
- Offered in caged and full complement configurations

Journal Bearings

- MS approved to AS81934 (formerly MIL-B-81934)
- Boeing and Airbus approved
- Plain and flanged • Self-lubricating
- High temperature • High loads
- Available in inch and metric sizes

Track Rollers

- MS approved to AS39901 (formerly MIL-B-3990)
- Boeing and Airbus approved
- ATF single row and ATL double row
- Sealed with lube holes and grooves
- Heavy duty cross-sections
- Advanced AeroCres® materials available

Double Row Hourglass Bearings

- Boeing approved
- High Radial and Axial Load Ratings
- Low Torque
- Integral Swage Grooves Available
- Pyrowear®, Cronidur30®, 52100, 9310 or 440C

Cam Followers

- MS approved to AS39901 (formerly MIL-B-3990)
- Advanced AeroCres® materials available
- Maximum corrosion resistance
- Superior lubricants and seals to reduce maintenance

Airframe Control Ball Bearings

- MS approved to AS7949 (formerly MIL-B-7949)
- Boeing and Airbus approved
- Single and double row
- Radial, self-aligning, and pulley series
- 52100 Cad plated and 440C stainless

Load Slot Bearings

- Spherical and rod end designs
- Superior ball-to-race conformity
- Reduced maintenance cost
- Variety of race materials available
- Boeing approved

Ball Bearing Rod Ends

- MS approved to AS6039 (formerly MIL-B-6039) • Boeing approved
- Various shank configurations
- Low coefficient of friction
- Advanced AeroCres® materials available

Specials

- Many specialty bearings, custom-designed and configured for diverse aerospace applications
- Capability for advanced aerospace specialty corrosion resistant and high temperature materials

RBC® AEROSPACE BEARINGS

Innovation. Commitment. Quality.

www.rbcbearings.com

This document contains a general overview of the products and features described herein. It is solely for informational purposes, does not represent a warranty of the information contained herein, and is not to be construed as an offer to sell or a solicitation to buy. Contact RBC Bearings for detailed information suitable to your specific applications. RBC Bearings reserves the right to modify its products and related product information at any time without prior notice.

Some of the products listed herein may be covered by one or more issued and pending U.S. or foreign patents. Contact RBC Bearings for product specific information.

© 2008, 2011, 2016 RBC Bearings Incorporated. All rights reserved.

RBC-ACRE REV. 10/16